OPERATOR'S MANUAL

IS2500Z Series

Zero-Turn Riding Mower

Not for Reproduction

Model Number:	Description
5900798	IS2500ZY20D52, 52" Cut Zero-Turn Riding Mower
5900799	IS2500ZY24D61, 61" Cut Zero-Turn Riding Mower
5900943	IS2500ZY20D52HT, 52" Cut Zero-Turn Riding Mower
5900500	IS2500ZY24D52, 52" Cut Zero-Turn Riding Mower

BRIGGS & STRATTON POWER PRODUCTS GROUP, LLC
5375 NORTH MAIN STREET
MUNNSVILLE NY 13409
800 933 6175

5102575
Rev G

Thank you for purchasing this quality-built FERRIS product. We're pleased that you've placed your confidence in the FERRIS brand. When operated and maintained according to the instructions in this manual, your FERRIS product will provide many years of dependable service.

This manual contains safety information to make you aware of the hazards and risks associated with this machine and how to avoid them. This machine is designed and intended to be used and maintained according to the manual and operated by trained professionals for finish cutting of established lawns and is not intended for any other purpose. It is important that you read and understand these instructions thoroughly before attempting to start or operate this equipment. **Save these original instructions for future reference.**

PRODUCT REFERENCE DATA	
Unit Model Number	Unit SERIAL Number
Mower Deck Model Number	Mower Deck SERIAL Number
Dealer Name	Date Purchased
ENGINE REFERENCE DATA	
Engine Make	Engine Model
Engine Type/Spec	Engine Code/Serial Number

See Page 11 for the location of Identification Numbers

Not for Reproduction

Briggs & Stratton Power Products Group, LLC.
Copyright © 2012 Briggs & Stratton Corporation
Milwaukee, WI, USA. All rights reserved.

FERRIS is a trademark of Briggs & Stratton Corporation
Milwaukee, WI, USA.

Contact Information:

Briggs & Stratton Power Products Group, LLC.
5375 N. Main St.
Munnsville, NY 13409-4003
(800) 933-6175
www.ferrisindustries.com

⚠ WARNING

Engine exhaust from this product contains chemicals known by the State of California to cause cancer, birth defects, or other reproductive harm.

⚠ WARNING

Battery posts, terminals, and related accessories contain lead and lead compounds — chemicals know to the State of California to cause cancer or reproductive harm. Wash hands after handling.

Table of Contents

Operator Safety 2
Identification Numbers 11
Safety Decals.....12
Safety Icons 13
Safety Interlock System 14
Features & Controls 15
Control Functions.....15
Operation..... 17
General 17
Checks Before Starting.....17
Priming The Fuel System 18
Starting the Engine 19
Stopping the Rider 19
Pushing the Rider by Hand.....19
Zero Turn Driving Practice.....20
Mowing.....22
Mowing Recommendations.....22
Mowing Methods.....23
Attaching a Trailer.....24
Raise & Lower the Roll Bar 25
Storage 26
Starting After Long Term Storage.....26
Regular Maintenance 27
Maintenance Schedule 27
Checking Tire Pressures 27
Checking/Adding Fuel.....28
Fuel Filter.....28
Service Air Filter 29
Check / Add Engine Oil 29
Change Engine Oil.....29
Check Hydraulic Oil Level.....30
Hydraulic Oil Filter Change.....30
Check Engine Coolant Level 31
Change Engine Coolant.....31
Clean Radiator & Screen.....31
Lubrication 32
Cleaning the Battery & Cables 34
Servicing the Mower Blades 35
Fuse Location 37
Gearbox Maintenance.....37
Troubleshooting, Adjustments & Service..... 38
Troubleshooting the Tractor.....38
Troubleshooting the Mower 39
Troubleshooting Common Cutting Problems.....40
Seat Adjustment.....41
Ground Speed Control Lever Adjustment.....41
Speed Balancing Adjustment.....41
Neutral Adjustment 42
Return to Neutral Adjustment 42
Parking Brake Adjustment 43
Suspension Adjustment 44
Mowing Height Adjustment 45
Foot Pedal Adjustment 45
Deck Lift Rod Timing Adjustment 46
Deck Leveling Adjustment 47
Deck Lift Spring 48
Hydraulic Pump Drive Belt Replacement 49
PTO Clutch Belt Replacment.....51
Mower Belt Replacement.....52
Deck Shut Down Module 53
Battery Service.....54
Specifications 56

NOTE: In this manual, “left” and “right” are referred to as seen from the operating position.

Not for Reproduction

Operating Safety

Congratulations on purchasing a superior-quality piece of lawn and garden equipment. Our products are designed and manufactured to meet or exceed all industry standards for safety.

Do not operate this machine unless you have been trained. Reading and understanding this operator's manual is a way to train yourself.

Power equipment is only as safe as the operator. If it is misused, or not properly maintained, it can be dangerous! Remember, you are responsible for your safety and that of those around you.

Use common sense, and think through what you are doing. If you are not sure that the task you are about to perform can be safely done with the equipment you have chosen, ask a professional: contact your local authorized dealer.

Read the Manual

The operator's manual contains important safety information you need to be aware of BEFORE you operate your unit as well as DURING operation.

Safe operating techniques, an explanation of the product's features and controls, and maintenance information is included to help you get the most out of your equipment investment.

Be sure to completely read the Safety Rules and Information found on the following pages. Also completely read the Operation section.

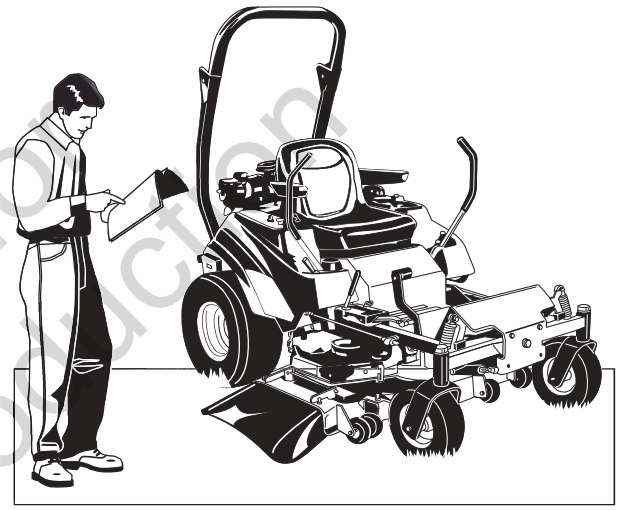

Not for Reproduction

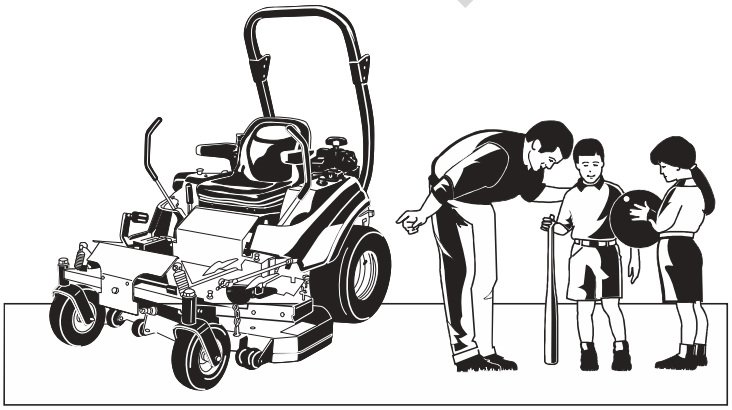

Children

Tragic accidents can occur with children. Do not allow them anywhere near the area of operation. Children are often attracted to the unit and mowing activity. Never assume that children will remain where you last saw them. If there is a risk that children may enter the area where you are mowing, have another responsible adult watch them.

Slope Operation

Operation on slopes can be dangerous. Using the unit on a slope that is too steep where you do not have adequate wheel traction (and control) can cause sliding, loss of steering, control, and possible rollover. You should not operate on a slope greater than a 5.4 foot rise over a 20 foot length (15 degrees).

Always mow across slopes, not up and down (to maintain traction on the wheels) and avoid sudden turns or rapid speed changes. Reduce speed and use extreme caution on ALL slopes.

Also, note that the surface condition you are on can greatly impact your ability to safely operate this machine. Operating on wet or slippery slopes can cause sliding and loss of steering and control. Do not operate on slopes that are slippery, wet, or have soft soil conditions.

If you feel unsure about operating the unit on a slope, don't do it. It's not worth the risk.

Thrown Objects

This unit has spinning mower blades. These blades can pick up and throw debris that could seriously injure a bystander. Be sure to clean up the area to be mowed and remove objects that could be thrown by the blade BEFORE you start mowing.

Do not operate this unit without the entire grass catcher or discharge guard (deflector) in place.

Also, do not allow anyone in the area while the unit is running! If someone does enter the area, shut the unit off immediately until they leave.

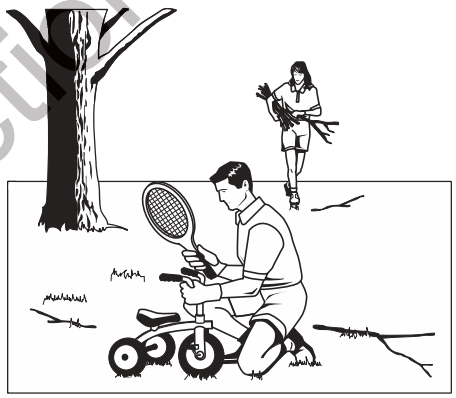

Not for Reproduction

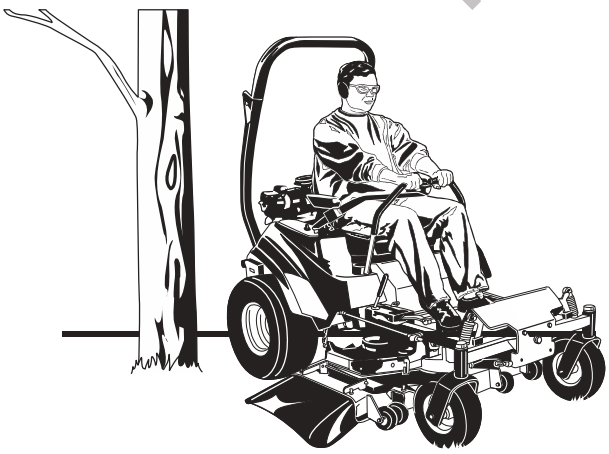

Moving Parts

This equipment has many moving parts that can injure you or someone else. However, if you stay in the operator zone (stay seated in the seat), and follow the safety rules in this operator's manual, the unit is safe to operate.

The mower deck has spinning mower blades that can amputate hands and feet. Do not allow anyone near the unit while it is running! Keep safety devices (guards, shields, and switches) in place and working.

To help you, the operator, use this equipment safely, it is equipped with an operator-present safety system. Do NOT attempt to alter or bypass the system. See your dealer immediately if the system does not pass all the safety interlock system tests found in this manual.

Roll Bar Use

Keep the roll bar in the raised position and fasten the seat belt. There is no roll over protection when the roll bar is down! Do not jump off if the mower tips (it is safer to be secured by the seat belt with the roll bar raised.)

Lower the roll bar only when necessary (such as to temporarily clear a low overhanging obstacle) and NEVER remove it. Do NOT use the seat belt when the roll bar is down. Raise the roll bar as soon as clearance permits.

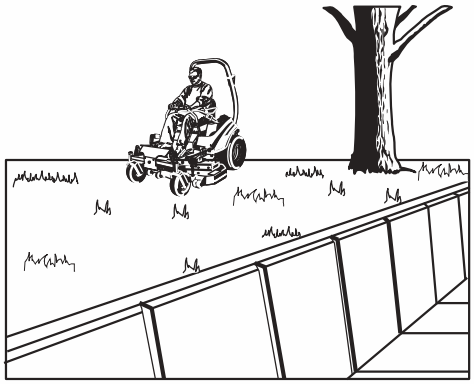

Retaining Walls, Drop-offs, and Water

Retaining walls and drop-offs around steps and water are a common hazard. Give yourself a minimum of two mower widths of clearance around these hazards and hand-trim with a walk behind mower or string trimmer. Wheels dropping over retaining walls, edges, ditches, embankments, or into water can cause rollovers, which may result in serious injury, death, or drowning.

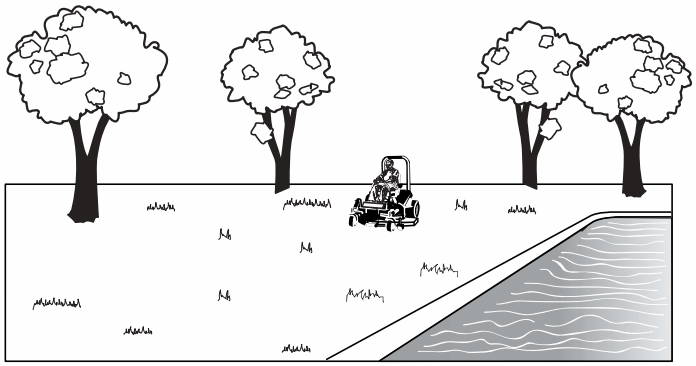

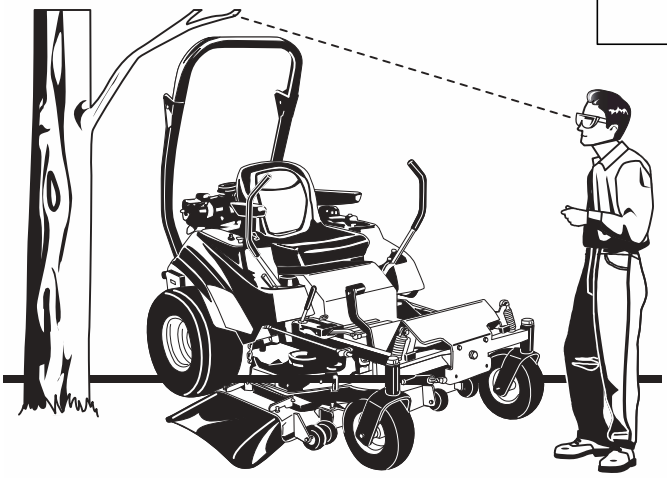

Overhead Obstacles

Check for overhead clearances before driving under any objects. Do not allow the roll bar to contact low overhanging obstacles such as tree branches and guide wires.

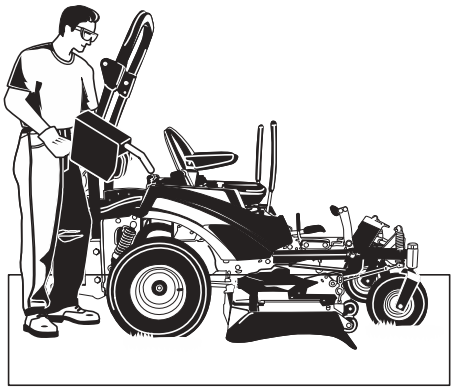

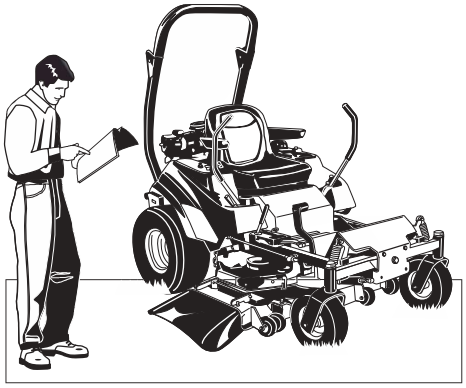

Fuel and Maintenance

Always disengage all drives, shutoff the engine, and remove the key before doing any cleaning, refueling, or servicing.

Gasoline and its vapors are extremely flammable. Do not smoke while operating or refueling. Do not add fuel while engine is hot or running. Allow engine to cool for at least 3 minutes prior to adding fuel.

Do not add fuel indoors, in an enclosed trailer, garage, or any other enclosed area that is not well ventilated. Gasoline spills should be cleaned up promptly and before operation begins.

Gasoline should be stored only in sealed containers approved for fuel.

Proper maintenance is critical to the safety and performance of your unit. Keep the unit free of grass, leaves, and excess oil. Be sure to perform the maintenance procedures listed in this manual, especially periodically testing the safety system.

Not for Reproduction

Enclosed Areas

Only operate this unit outdoors and away from unventilated areas such as inside garages or enclosed trailers. The engine emits poisonous carbon monoxide gas and prolonged exposure in an enclosed area can result in serious injury or death.

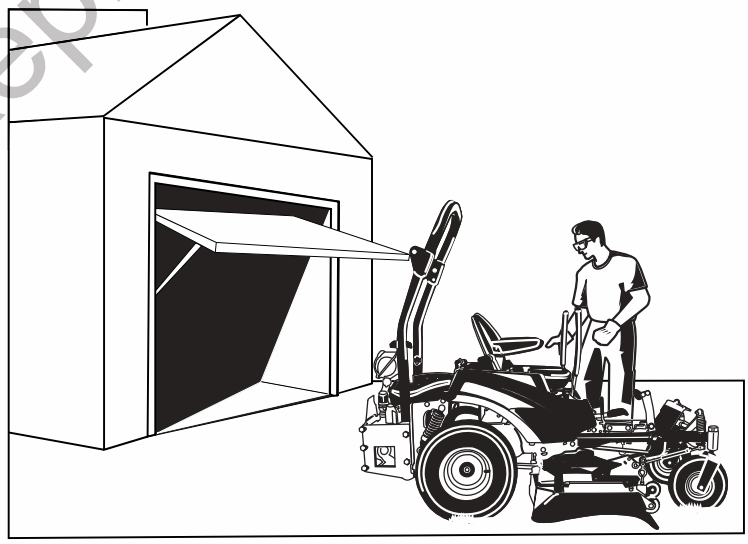

Operator Safety

Read these safety rules and follow them closely. Failure to obey these rules could result in loss of control of unit, severe personal injury or death to you, or bystanders, or damage to property or equipment. **This mowing deck is capable of amputating hands and feet and throwing objects.** The triangle ⚠ in text signifies important cautions or warnings which must be followed.

TRAINING

1. Read, understand, and follow all instructions in the manual and on the unit before starting. If the operator(s) or mechanic(s) can not read English it is the owner's responsibility to explain this material to them.
2. Become familiar with the safe operation of the equipment, operator controls, and safety signs.
3. All operators and mechanics should be trained. The owner is responsible for training the users.
4. Only allow responsible adults, who are familiar with the instructions, to operate the unit.
5. Never let children or untrained people operate or service the equipment. Local regulations may restrict the age of the operator.
6. The owner/user can prevent and is responsible for accidents or injuries occurring to themselves, other people or property.
7. Data indicates that operators, age 60 years and above, are involved in a large percentage of riding mower-related injuries. These operators should evaluate their ability to operate the riding mower safely enough to protect themselves and others from serious injury.

PREPARATION

1. Evaluate the terrain to determine what accessories and attachments are needed to properly and safely perform the job. Use only accessories and attachments approved by the manufacturer.
2. Wear appropriate clothing including safety shoes, safety glasses and ear protection. Long hair, loose clothing or jewelry may get tangled in moving parts.
3. Inspect the area where the equipment is to be used and remove all objects such as rocks, toys and wire, which can be thrown by the machine.
4. Use extra care when handling gasoline and other fuels. They are flammable and vapors are explosive.
   a) Use only an approved container.
   b) Never remove fuel cap or add fuel with the engine running. Allow engine to cool before refueling. Do not smoke.
   c) Never refuel or drain the machine indoors.
5. Check that operator's presence controls, safety switches and shields are attached and functioning properly. Do not operate unless they are functioning properly.

OPERATION

1. Never run an engine in an enclosed area.
2. Mow only in the daylight or with good artificial light, keeping away from holes and hidden hazards.
3. Be sure all drives are in neutral and parking brake is engaged before starting engine. Only start engine from the operator's position. Use seat belts if provided.
4. Be sure of your footing while using pedestrian controlled equipment, especially when backing up. Walk, don't run. Reduced footing could cause slipping.
5. Slow down and use extra care on hillsides. Be sure to travel in the recommended direction on hillsides. Turf conditions can affect the machines stability. Use caution when operating near drop-offs.
6. Do not mow in reverse unless absolutely necessary. Always look down and behind before and while traveling in reverse.
7. Be aware of the mower discharge direction and do not point it at anyone. Do not operate the mower without either the entire grass catcher or the deflector in place.
8. Slow down and use caution when making turns and when changing directions on slopes.
9. Never raise deck with the blades running.
10. Never leave a running unit unattended. Always disengage the PTO, set parking brake, stop engine, and remove keys before dismounting. Keep hands and feet away from the cutting units.
11. Turn off the PTO switch to disengage the blades when not mowing.
12. Never operate with guards not securely in place. Be sure all interlocks are attached, adjusted properly and functioning properly.
13. Never operate with the discharge deflector raised, removed or altered, unless using a grass catcher.
14. Do not change the engine governor setting or overspeed the engine.
15. Stop on level ground, lower implements, disengage drives, engage parking brake, shut off engine before leaving the operator's position for any reason including emptying the grass catchers or unclogging the chute.
16. Stop equipment and inspect blades after striking objects or abnormal vibration occurs. Make necessary repairs before resuming operations.
17. Keep hands and feet away from the cutting units.
18. Look behind and down before backing up to be sure of a clear path.
19. Never carry passengers and keep pets and bystanders away.
20. Do not operate the unit while under the influence of alcohol or drugs.
21. Slow down and use caution when making turns and crossing roads and sidewalks. Stop blades if not mowing.
22. Use care when loading or unloading the machine into a trailer or truck.

Not for Reproduction

23. Use care when approaching blind corners, shrubs, trees or other objects that may obscure vision.
24. To reduce fire hazard, keep unit free of grass, leaves & excess oil. Do not stop or park over dry leaves, grass or combustible materials.

⚠ WARNING

It is a violation of California Public Resource Code, Section 4442, to use or operate the engine on any forest-covered, brush-covered or grass-covered land unless the exhaust system is equipped with a spark arrester, as defined in Section 4442, maintained in effective working order. Other states or federal jurisdictions may have similar laws. Contact an Authorized Service Dealer to obtain a spark arrester designed for the exhaust system installed on this engine.

25. OSHA regulations may require the use of hearing protection when exposed to sound levels greater than 85 dBA for an 8 hour time period.

⚠ CAUTION

This machine produces sound levels in excess of 85 dBA at the operator's ear and can cause hearing loss though extended periods of exposure.

Wear hearing protection when operating this machine.

SLOPE OPERATION

Slopes are a major factor related to loss-of-control and tip-over accidents, which can result in severe injury or death. All slopes require extra caution. If you cannot back up the slope or if you feel uneasy on it, do not drive on it.

⚠ WARNING

Do not use this machine on slopes greater than 15°.*

Select slow ground speed before driving onto slope. Use extra caution when operating on slopes with rear-mounted grass catchers.

Mow across the face of slopes, not up and down, use caution when changing directions and DO NOT START OR STOP ON SLOPE.

Do

1. Mow across slopes, not up and down.
2. Remove obstacles such as rocks, tree limbs, etc.
3. Watch for holes, ruts, or bumps. Uneven terrain could overturn the unit. Tall grass can hide obstacles.
4. Use slow speed. Choose a slow speed so that you will not have to stop or change speed while on the slope.
5. Use extra care with grass catchers or other attachments. These can change the stability of the unit.
6. Keep all movement on the slopes slow and gradual. Do not make sudden changes in speed or direction.
7. See your authorized dealer for recommendations of available weights to improve stability.

Do Not

1. Avoid starting, stopping, or turning on a slope. If tires lose traction (i.e. machine stops forward motion on a slope), disengage the blade(s) (PTO) and drive slow off the slope.
2. Do not turn on slopes unless necessary, and then, turn slowly and gradually uphill, if possible. Never mow down slopes.
3. Do not mow near drop-offs, ditches, or embankments. The operator could lose footing or balance or mower could suddenly turn over if a wheel is over the edge of a cliff or ditch, or if an edge caves in.
4. Do not mow on wet grass. Reduced footing or traction could cause sliding.
5. Do not try to stabilize the unit by putting your foot on the ground. (ride-on units)
6. Do not mow excessively steep slopes.
7. Do not use grass catcher on steep slopes.
8. Do not mow slopes if you cannot back up them.

TOWED EQUIPMENT (RIDE-ON UNITS)

1. Tow only with a machine that has a hitch designed for towing. Do not attach towed equipment except at the hitch point.
2. Follow the manufacturer's recommendations for weight limit for towed equipment and towing on slopes. See attaching a trailer under OPERATION.
3. Never allow children or others in or on towed equipment.
4. On slopes, the weight of the towed equipment may cause loss of traction and loss of control.
5. Travel slowly and allow extra distance to stop.
6. Do not shift to neutral and coast down hill.

CHILDREN

Tragic accidents can occur if the operator is not alert to the presence of children. Children are often attracted to the unit and the mowing activity. Never assume that children will remain where you last saw them.

1. Keep children out of the mowing area and under the watchful care of another responsible adult.
2. Be alert and turn unit off if children enter the area.
3. Before and during reverse operation, look behind and down for small children.
4. Never carry children, even with the blade(s) off. They may fall off and be seriously injured or interfere with safe unit operation. Children who have been given rides in the past may suddenly appear in the mowing area for another ride and be run over or backed over by the machine.
5. Never allow children to operate the unit.
6. Use extra care when approaching blind corners, shrubs, trees, or other objects that may obscure vision.

*This limit was determined per CEN Standard EN 836:1997, Section 5.2.2 and is based on the EN 836 Stability Test procedure described in Section 4.2.4.2. The 15 degree "limit of stability" is equal to 50% of the angle at which machine lift-off occurred in static tests. Actual dynamic stability may vary depending on operating conditions.

Not for Reproduction

EMISSIONS

1. Engine exhaust from this product contains chemicals known, in certain quantities, to cause cancer, birth defects, or other reproductive harm.
2. Look for the relevant Emissions Durability Period and Air Index information on the engine emissions label.

IGNITION SYSTEM (GASOLINE MODELS)

1. This spark ignition system complies with Canadian ICES-002.

SERVICE AND MAINTENANCE

To avoid personal injury or property damage, use extreme care in handling gasoline. Gasoline is extremely flammable and the vapors are explosive.

Safe Handling of Gasoline

1. Extinguish all cigarettes, cigars, pipes, and other sources of ignition.
2. Use only approved gasoline containers.
3. Never remove the gas cap or add fuel with the engine running. Allow the engine to cool before refueling.
4. Never fuel the machine indoors.
5. Never store the machine or fuel container where there is an open flame, spark, or pilot light such as near a water heater or other appliance.
6. Never fill containers inside a vehicle or on a truck bed with a plastic bed liner. Always place containers on the ground away from your vehicle before filling.
7. Remove gas-powered equipment from the truck or trailer and refuel it on the ground. If this is not possible, then refuel such equipment on a trailer with a portable container, rather than from a gasoline dispenser nozzle.
8. Keep nozzle in contact with the rim of the fuel tank or container opening at all times until fueling is complete. Do not use a nozzle lock-open device.
9. If fuel is spilled on clothing, change clothing immediately.
10. Never over-fill the fuel tank. Replace gas cap and tighten securely.
11. Use extra care in handling gasoline and other fuels. They are flammable and vapors are explosive.
12. If fuel is spilled, do not attempt to start the engine but move the machine away from the area of spillage and avoid creating any source of ignition until fuel vapors have dissipated.
13. Replace all fuel tank caps and fuel container caps securely.

Maintenance and Storage

1. Always observe safe refueling and fuel handling practices when refueling the unit after transportation or storage.
2. Always follow the engine manual instructions for storage preparations before storing the unit for both short and long term periods.
3. Always follow the engine manual instructions for proper start-up procedures when returning the unit to service.
4. Never store the machine or fuel container inside where there is an open flame, such as in a water heater. Allow unit to cool before storing.
5. Shut off fuel while storing or transporting. Do not store fuel near flames or drain indoors.
6. Keep all hardware, especially blade attachment bolts, tight and keep all parts in good working condition. Replace all worn or damaged decals.
7. Never tamper with safety devices. Check their proper operation regularly.
8. Disengage drives, lower implement, set parking brake, stop engine and remove key or disconnect spark plug wire. Wait for all movement to stop before adjusting, cleaning or repairing.
9. Clean grass and debris from cutting units, drives, mufflers, and engine to prevent fires. Clean up oil or fuel spillage.
10. Let engine cool before storing and do not store near flame.
11. Stop and inspect the equipment if you strike an object. Repair, if necessary, before restarting.
12. Park machine on level ground. Never allow untrained personnel to service machine.
13. Use jack stands to support components when required.
14. Carefully release pressure from components with stored energy.
15. Disconnect battery or remove spark plug wire before making any repairs. Disconnect the negative terminal first and the positive last. Reconnect positive first and negative last.
16. Use care when checking blades. Wrap the blade(s) or wear gloves, and use caution when servicing them. Only replace blades. Never straighten or weld them.
17. Keep hands and feet away from moving parts. If possible, do not make adjustments with the engine running.
18. Charge batteries in an open well ventilated area, away from spark and flames. Unplug charger before connecting or disconnecting from battery. Wear protective clothes and use insulated tools.
19. Grass catcher components are subject to wear, damage, and deterioration, which could expose moving parts or allow objects to be thrown. Frequently check components and replace with manufacturer's recommended parts, when necessary.
20. Check brake operation frequently. Adjust and service as required.
21. Use only factory authorized replacement parts when making repairs.
22. Always comply with factory specifications on all settings and adjustments.
23. Only authorized service locations should be utilized for major service and repair requirements.
24. Never attempt to make major repairs on this unit unless you have been properly trained. Improper service procedures can result in hazardous operation, equipment damage and voiding of manufacturer's warranty.
25. Units with hydraulic pumps, hoses, or motors: WARNING: Hydraulic fluid escaping under pressure may have sufficient force to penetrate skin and cause serious injury. If foreign fluid is injected into the skin it must be surgically removed within a few hours by a doctor familiar with this form of injury or gangrene may result. Keep body and hands away from pin holes or nozzles that eject hydraulic fluid under high pressure. Use paper or cardboard, and not hands, to search for

Not for Reproduction

leaks. Make sure all hydraulic fluid connections are tight and all hydraulic hoses and lines are in good condition before applying pressure to the system. If leaks occur, have the unit serviced immediately by your authorized dealer.

26. WARNING: Stored energy device. Improper release of springs can result in serious personal injury. Springs should be removed by an authorized technician.
27. Models equipped with an engine radiator: WARNING: Stored energy device. To prevent serious bodily injury from hot coolant or steam blow-out, never attempt to remove the radiator cap while the engine is running. Stop the engine and wait until it is cool. Even then, use extreme care when removing the cap.

ROLL BAR INSTRUCTIONS

For models equipped with factory-installed Roll Over Protection System (ROPS).

⚠ WARNING

In order to avoid serious injury or death from roll over, it is important to follow the warnings listed below.

OPERATIONAL WARNINGS

- Always use the seat belt when the roll bar is in the raised position.
- Never use the seat belt when the roll bar is in the down position.
- Remember there is no roll over protection when the roll bar is in the down position so it is very important to always keep the roll bar in the raised position whenever possible.
- Lower the roll bar to the down position only when it is absolutely necessary.
- Check for overhead clearances before driving under any objects. Do not allow roll bar to contact low overhanging obstacles such as tree branches and guide wires.
- Never remove the roll bar from the vehicle.
- Do not exceed the machine weight rating of the roll bar.
- Read and follow all of the instructions shown below regarding the inspection and maintenance of the roll bar structure and the seat belt.

INSPECTION OF THE ROLL BAR PROTECTIVE STRUCTURE

⚠ WARNING

Failure to properly inspect and maintain the ROLL BAR protective structure can cause serious injury or death.

A ROLL BAR, like any other safety device, needs to be periodically inspected to verify that the integrity of the device has not been compromised through normal machine use, misuse, age degradation, modifications, or a roll over.

To maintain operator roll over protection and roll bar effectiveness:

- If a ROLL BAR becomes damaged for any reason, such as a collision, roll over or impact, the ROLL BAR must be replaced. Small undetectable cracks can reduce the effectiveness of the ROLL BAR. Never weld, straighten, or repair the ROLL BAR.
- Never alter the ROLL BAR by welding anything to it or by drilling additional holes.
- **BEFORE FIRST TIME USE** - Inspect the ROLL BAR structure and mounting hardware for:

  1) Check to make sure the machine GVW (Gross Vehicle Weight), including attachments, restrained payload, fuel and operator, is not in excess of the maximum weight specified on the ROLL BAR label.
  2) Make sure there isn't any missing, damaged, or loose mounting hardware.
  3) Make sure the ROLL BAR has been correctly and completely installed.

- **EVERY 100 HOURS** - Inspect the ROLL BAR structure and mounting hardware for:

  1) Any cracks in the structure (structural members and/or welds).
  2) Significant corrosion on any part of the ROLL BAR structure or hardware.
  3) Missing, damaged, or loose mounting hardware
  4) Mounting hardware that is of a grade lesser than specified.
  5) Machine GVW (Gross Vehicle Weight), including attachments, restrained payload, fuel and operator, in excess of the maximum weight specified on the ROLL BAR label.
  6) Any modifications that have been made, such as unauthorized welds and holes.
  7) Any permanent deformation or twisting of the ROLL BAR structure.
  8) That the ROLL BAR label is still in place and is readable.
  9) That the ROLL BAR on-product warning labels are still on the ROLL BAR and are readable.

- If there is any doubt as to the condition of the ROLL BAR, remove the machine from service and contact your dealer for assistance.

Not for Reproduction

⚠ WARNING

Failure to properly inspect and maintain the seat belt can cause serious injury or death.

INSPECTION AND MAINTENANCE OF THE ROLL BAR SEAT BELT

- The seat belt like the ROLL BAR, needs to be periodically inspected to verify that the integrity has not been compromised through normal machine use, misuse, age degradation, modifications, or a roll over. If the seat belt does not pass all of the following tests, it should be replaced.

- **BEFORE EACH USE** – Conduct the following inspections/maintenance of the seat belt and retraction mechanism:

  1) Check for dirt or debris in the retraction mechanism. If dirt or debris is found, it should be removed.

  2) Check to make sure the retraction mechanism retracts easily and completely.

  3) Check for damage to any part of the seat belt such as nicks, cuts, loose stitching, or fraying.

  4) Check that the buckle and latch operate properly and that the latch plate is not excessively worn, deformed, or the buckle is damaged or cracked. The seat belt should latch and release easily.

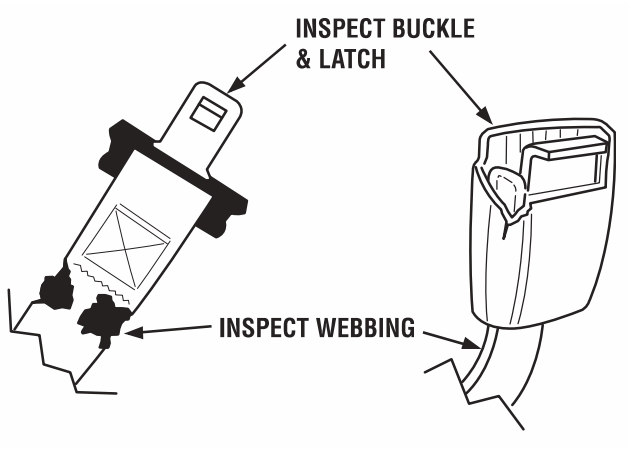

Not for Reproduction

Identification Numbers

Tractor Identification Tag

When contacting your authorized dealer for replacement parts, service, or information you MUST have these numbers.

Record your model/serial number and engine serial numbers on the space provided for easy access. These numbers can be found in the locations shown in Figure 1.

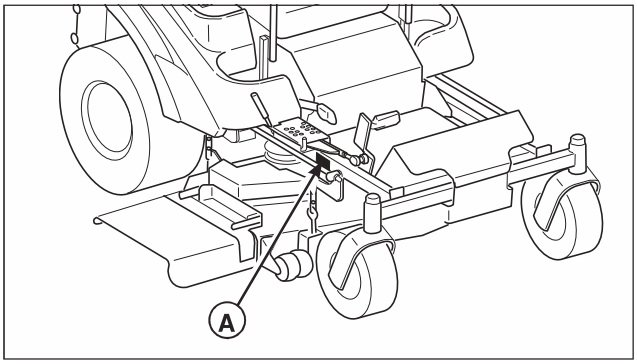

Figure 1. Identification Tag Locations
A. Tractor Identification Tag

Not for Reproduction

Safety Decals

This unit has been designed and manufactured to provide you with the safety and reliability you would expect from an industry leader in outdoor power equipment manufacturing.

Although reading this manual and the safety instructions it contains will provide you with the necessary basic knowledge to operate this equipment safely and effectively, we have placed several safety labels on the unit to remind you of this important information while you are operating your unit.

All DANGER, WARNING, CAUTION and instructional messages on your rider and mower should be carefully read and obeyed. Personal bodily injury can result when these instructions are not followed. The information is for your safety and it is important! The safety decals on this page are on your rider and mower.

If any of these decals are lost or damaged, replace them at once. See your local dealer for replacements.

These labels are easily applied and will act as a constant visual reminder to you, and others who may use the equipment, to follow the safety instructions necessary for safe, effective operation.

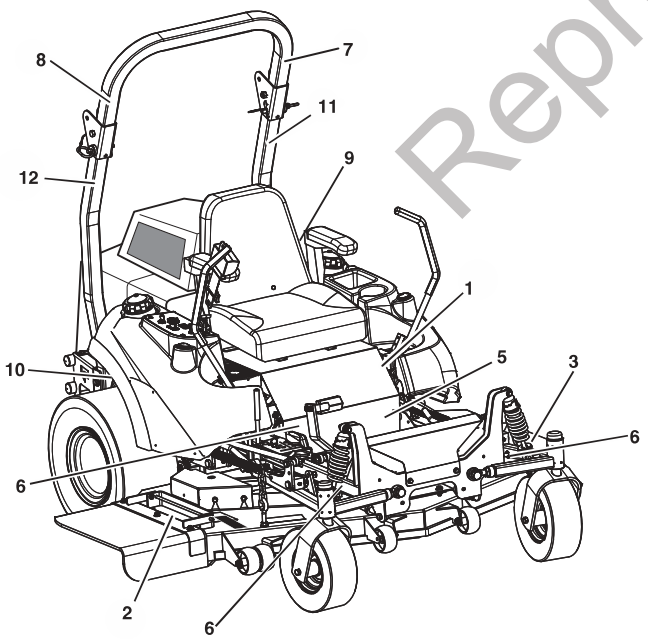

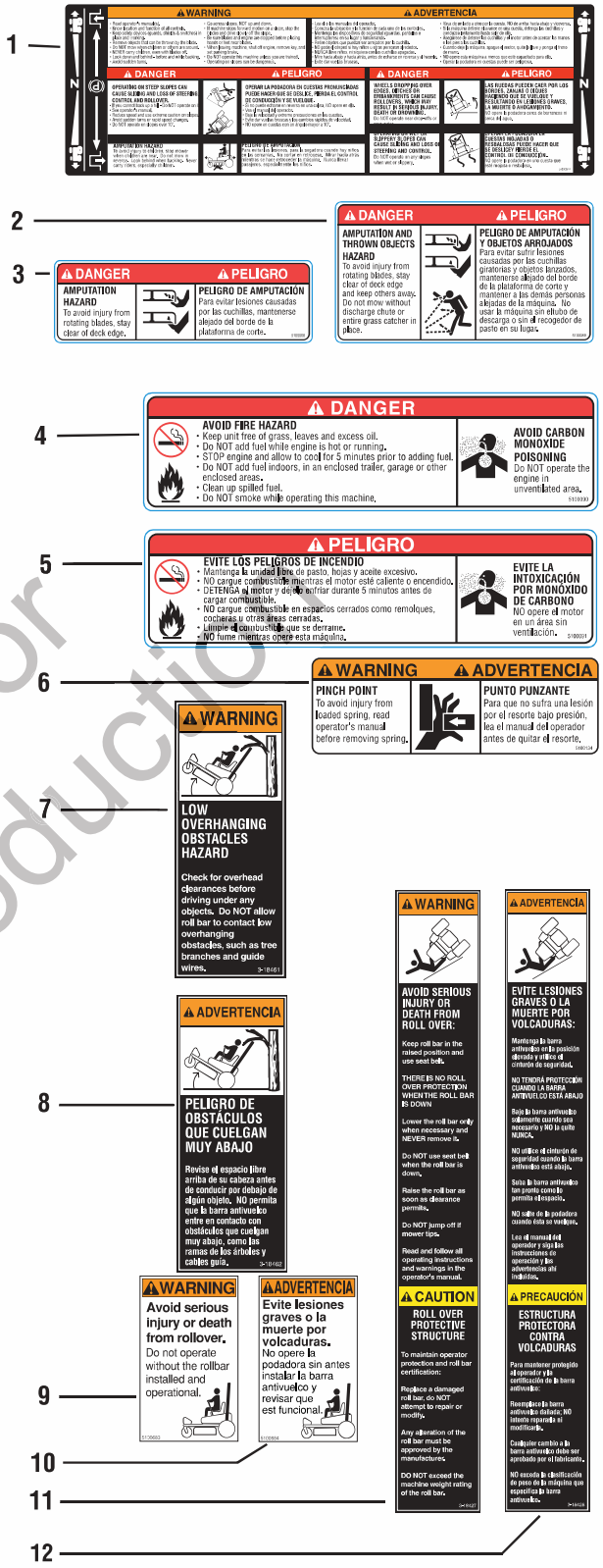

Not for Reproduction

Safety Icons

The alert symbol ⚠ is used to identity safety information about hazards that can result in personal injury. A signal word (DANGER, WARNING, or CAUTION) is used with the alert symbol to indicate the likelihood and the potential severity of the injury. In addition, a hazard icon may be used to represent the type of hazard. An explanation of hazard levels and icons are as follows:

⚠ DANGER

This indicates a hazard which, if not avoided, **will result in serious injury or death.**

⚠ WARNING

This indicates a hazard which, if not avoided, **could result in serial injury or death.**

⚠ CAUTION

This indicates a hazard which, if not avoided, **might result in minor or moderate injury.**

NOTICE

These messages presented without the alert symbol indicate a situation where the unit or property could be damaged.

North American Safety Icons

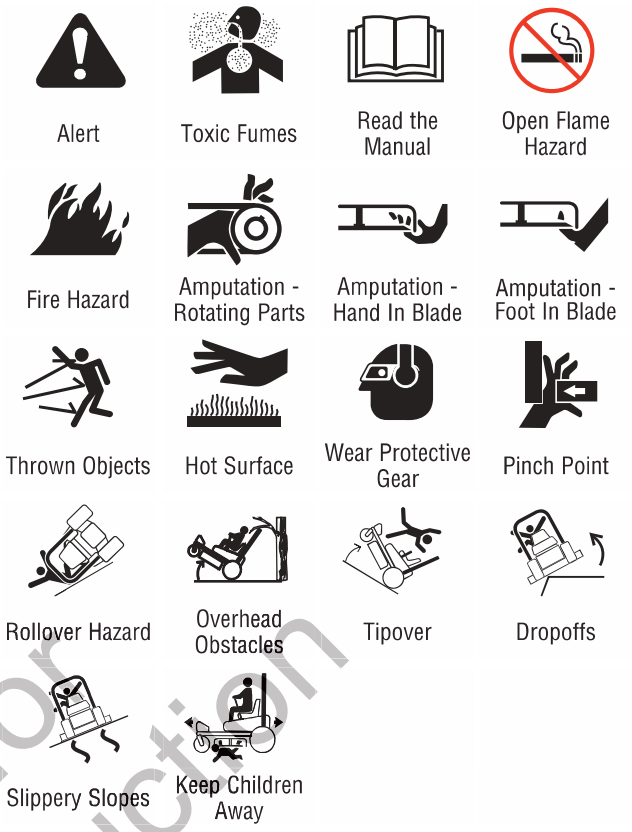

Not for Reproduction

Safety Interlock System

This unit is equipped with safety interlock switches. These safety systems are present for your safety, do not attempt to bypass safety switches, and never tamper with safety devices. Check their operation regularly.

Operational SAFETY Checks

Test 1 — Engine should NOT crank if:

- PTO switch is engaged, OR
- Parking brake is not engaged, OR
- Motion control handles are not in the NEUTRAL position.

Test 2 — Engine SHOULD crank if:

- PTO switch is NOT engaged, AND
- Parking brake is engaged, AND
- Motion control handles are locked in the NEUTRAL position.

Test 3 — Engine should SHUT OFF if:

- Operator rises off seat with PTO engaged, OR
- Operator rises off seat with parking brake disengaged.
- Operator moves motion control handles out of their neutral positions before disengaging parking brake.

Test 4 — Blade Brake Check

Mower blades and mower drive belt should come to a complete stop within seven (7) seconds after electric PTO switch is turned off (or operator rises off seat). If mower drive belt does not stop within seven (7) seconds, see your dealer.

NOTE: Once the engine has stopped, PTO switch must be turned off, parking brake must be engaged, and the motion control handles must be locked in the NEUTRAL position after the operator returns to the seat in order to start the engine.

WARNING

If the unit does not pass a safety test, do not operate it. See your authorized dealer. Under no circumstance should you attempt to defeat the purpose of the safety interlock system.

Not for Reproduction

Features and Controls

A. S/N: 2014582798 & Below
B. S/N: 2014582799 & Above

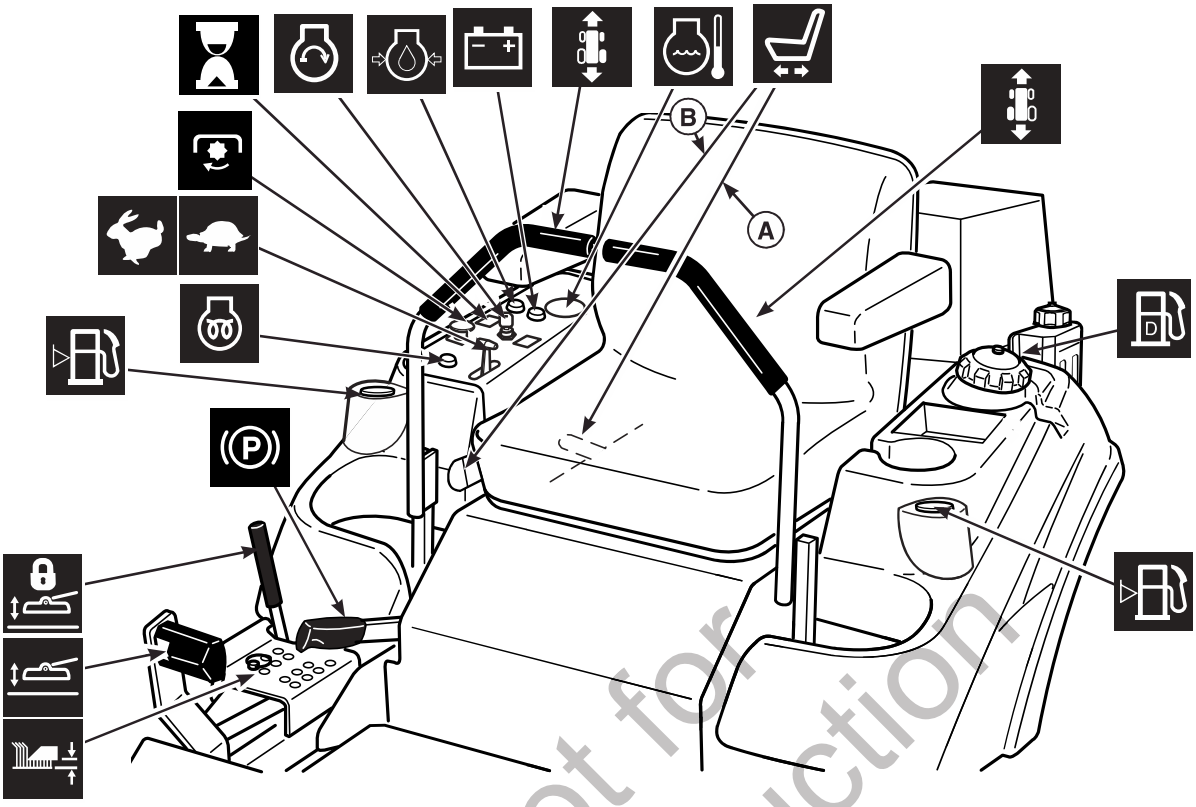

Control Functions

The information below briefly describes the function of individual controls. Starting, stopping, driving, and mowing require the combined use of several controls applied in specific sequences. To learn what combination and sequence of controls to use for various tasks see the OPERATION section.

Ground Speed Levers

These levers control the ground speed of the rider. The left lever controls the left rear drive wheel and the right lever controls the right rear drive wheel.

Moving a lever forward increases the FORWARD speed of the associated wheel, and pulling back on a lever increases the REVERSE speed.

Note: The further a lever is moved away from the neutral position the faster the drive wheel will turn.

See the Operating the Zero Turn Rider section for steering instructions.

Seat Adjustment Lever

The seat can be adjusted forward and back.

S/N: 2014582798 & Below: Move the lever forward, position the seat as desired, and release the lever to lock the seat in position.

S/N: 2014582799 & Above: Move the lever towards the left, position the seat as desired, and release the lever to lock the seat in position.

Ignition Switch

(S/N: 2015276814 & Below):

The ignition switch starts and stops the engine, it has four positions:

	HEAT	Heats the glow plugs.
O	OFF	Stops the engine and shuts off the electrical system.
I	RUN	Allows the engine to run, powers the electrical system and primes the fuel system
	START	Cranks the engine for starting.

NOTE: Never leave the ignition switch in the ON position with the engine stopped–this drains the battery.

Not for Reproduction

Ignition Switch

(S/N: 2015276815 & Above):

The ignition switch starts and stops the engine, it has three positions:

OFF	Stops the engine and shuts off the electrical system.
HEAT/ RUN	Turning the key to this position prior to starting the engine heats the glow plugs. After the engine starts the ignition returns to this position and allows the engine to run and powers the electrical system.
START	Cranks the engine for starting.

NOTE: Never leave the ignition switch in the ON position with the engine stopped–this drains the battery.

PTO (Power Take Off) Switch

The PTO switch engages and disengages the mower. Pull UP on the switch to engage the mower, and push DOWN to disengage the mower.

Throttle Control

Moving the throttle control fully forward is FULL throttle position. Always operate the unit at FULL throttle when mowing.

Parking Brake

DISENGAGE	Releases the parking brake.
ENGAGE	Locks the parking brake.

Pull the parking brake lever back to engage the parking brake. Move the lever fully forward to disengage the parking brake. *NOTE: To start the unit the parking brake must be engaged.*

Deck Lift Pedal, Cutting Height Adjustment Pin & Deck Lift Lock Lever

These control the cutting height of the mower deck. Depress the pedal until it locks into the 5” (12,7 cm) position. Place the adjustment pin in the desired cutting height and release the lift lock lever.

Hour Meter

Measures the time of the PTO being engaged. The hour meter measures the number of hours the PTO has been engaged.

Note: The hour meter will register the passage of time only when the PTO is engaged. The hour meter has a self contained power source so the total hours are always visible.

Glow Plug Indicator

Lamp that indicates that the glow plugs are heating. Hold the ignition key in the “HEAT” position until indicator lamp turns off, then turn the key to start.

Voltage Gauge

Gauge measures the output voltage of the engine charging system.

Oil Pressure Indicator

Lamp that indicates a low oil pressure condition.

Water Temperature Gauge

Gauge measures the engine coolant temperature.

Fuel Tank Cap

To remove the cap, turn counterclockwise.

Fuel Level Gauge

Displays the fuel level in the tank.

Not for Reproduction

Operation

General Operating Safety

Before first time operation:

- Be sure to read all information in the Safety and Operation sections before attempting to operate this tractor and mower.
- Become familiar with all of the controls and how to stop the unit.
- Drive in an open area without mowing to become accustomed to the unit.

⚠ WARNING

Never allow passengers to ride on the unit.

Before leaving the operator's position for any reason, engage the parking brake, disengage the PTO, stop the engine and remove the key.

To reduce fire hazard, keep the engine, tractor and mower free of grass, leaves and excess grease. Do not stop or park tractor over dry leaves, grass or combustible materials.

Gasoline is highly flammable and must be handled with care. Never fill the tank when the engine is still hot from recent operation. Do not allow open flame, smoking or matches in the area. Avoid over-filling and wipe up any spills.

⚠ WARNING

Do not load this zero-turn rider on a trailer or truck using two separate ramps. Only use a single ramp that is at least one foot wider than the width of the rear wheels of this rider. This rider has a zero turning radius and the rear wheels could fall off the ramps, or the rider could tip over injuring the operator or bystanders.

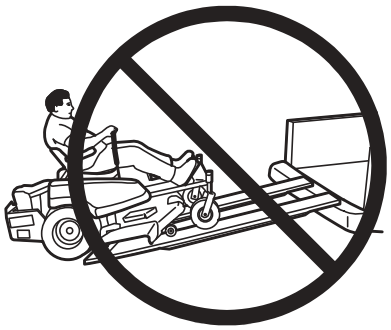

⚠ WARNING

Do not use this machine on slopes greater than 15 degrees.

Select slow ground speed before driving onto a slope. Use extra caution when operating on slopes with a rear-mounted grass catcher.

Mow across the face of slopes, not up and down,use caution when changing directions and DO NOT START OR STOP ON SLOPE.

Checks Before Starting

- Check that crankcase is filled to full mark on dipstick. See the engine Operators Manual for instructions and oil recommendations.
- Check the radiator fluid level. See engine operator's manual for instructions.
- Check the hydraulic oil level. Refer to REGULAR MAINTENANCE section.
- Make sure all nuts, bolts, screws and pins are in place and tight.
- Adjust the seat position, and make certain you can reach all controls from the operators position.
- Fill the fuel tanks with fresh fuel. Refer to engine manual for fuel recommendations.

Not for Reproduction

Priming the Fuel System

Priming the fuel system removes any air bubbles from the fuel system.

⚠ WARNING

Fuel leaked or spilled onto hot surfaces or electrical components can cause a fire. To help prevent possible injury, turn the ignition switch off when changing fuel filter or water separator element. Clean up fuel spills immediately.

The fuel system would only need to be primed under the following conditions:

- Before starting the engine for the first time.
- After running the machine out of fuel and fresh fuel has been added to the fuel tanks.
- After performing maintenance on the fuel system, such as changing the fuel filter or replacing a fuel system component.

To prime the fuel system:

1. Make sure that there is fuel in the fuel tanks and that both fuel tank shut off valves (A, Figure 2) are open.
2. Turn the key to the ON position (not the start position) for 10 to 15 seconds. The electric fuel pump feeds fuel to the system.

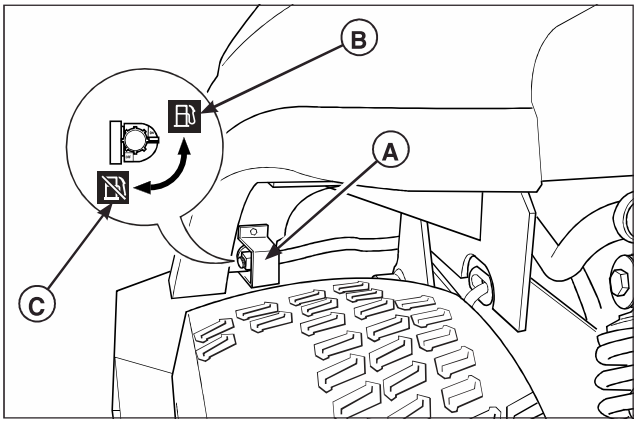

Figure 2. Fuel Shut Off Valve
A. Fuel Shut Off Valve Location
B. Open Position
C. Closed Position

Not for Reproduction