Backrest adjustment

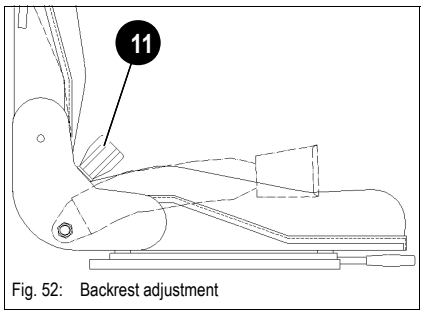

Fig. 52: Backrest adjustment

☞ *Turn rotary switch* **11** *in the required direction*

➥ + backrest inclination to the rear

➥ + backrest inclination to the front

➥ Seat belt

3.14 Seat belt

Warning!

Personal injury hazard. The seat belt provides positive support in the operator seat during operation and travel that keeps the operator located within the comfort zone for control operation. It also reduces the risk of injury in the event a tipping incident occurs during use.

☞ *Always buckle up before moving or working with the machine.*

☞ *Seat belt must not be twisted.*

☞ *Seat belt must run over the hips – not over the stomach – and must always be applied tightly.*

☞ *Do not place the seat belt over hard, edged or fragile items (tools, rulers, glasses, pen) carried inside your clothes.*

☞ *Never buckle up 2 persons with one seat belt.*

☞ *Check seat belts each time the operator uses the machine. Have damaged parts immediately replaced by an authorized workshop before using the machine.*

☞ *Always keep the seat belt and buckle clean, as dirt and debris can cause the buckle to malfunction and accelerate internal webbing abrasion in the belt..*

☞ *Seat belt buckle must not be obstructed by foreign bodies (paper or similar); otherwise the buckle latch cannot lock into place!*

Warning!

Personal injury hazard. The seat belt strap will be stretched after an accident and is no longer serviceable.The seat belt will NOT provide adequate protection in the future!

☞ *Replace the seat belt after an accident.*

☞ *Have fastening points and seat fixture examined for damage or failure. Repair or replace if damaged.*

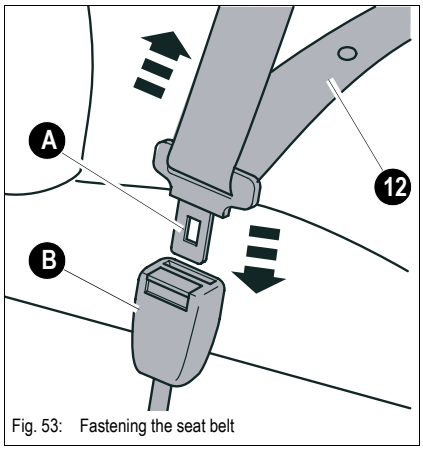

Fig. 53: Fastening the seat belt

Seat belt **12** is for the driver's safety during work on construction sites and during road travel.

Fastening the seat belt:

☞ *Fasten seat belt* **12** *as follows before moving the machine:*

- Hold belt on buckle latch **A** and run it slowly and steadily over the hips to buckle **B.**
- Insert buckle latch **A** into buckle **B** with an audible click **(pull test).**
- Tighten the seat belt by pulling at its end.

  ➥The seat belt must always be tightly in place over the hips!

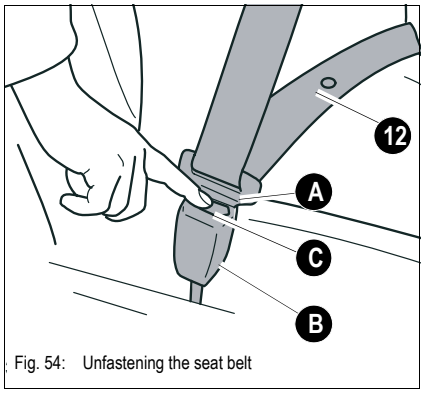

Fig. 54: Unfastening the seat belt

Unfastening the seat belt:

☞ *Unfasten seat belt* **12** *as follows:*

- Hold the seat belt.
- Press red switch **C** on buckle **B.**

  ➥Latch **A** is released from buckle **B** by spring pressure.
- Slowly return the seat belt to the retractor.

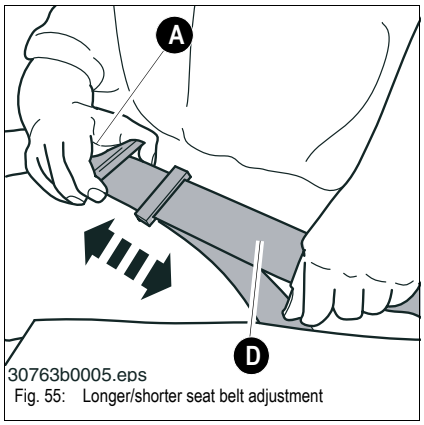

Fig. 55: Longer/shorter seat belt adjustment

Longer/shorter lap belt adjustment:

☞ *Lengthen the lap belt as follows:*

- Hold buckle latch **A** at a right angle to the seat belt and pull the seat belt to the required length .
- To shorten the lap belt, just pull the free end **D** of the belt.

3.15 Emergency exit (with cab option)

You can enter and exit the cab through the side and front windows in an emergency.

Caution!

Personal injury hazard. Do not use the side or front window as routine exits from the machine. Windows are to be used as exits only if the access opening (door for cab option) is blocked or cannot be opened through normal operating procedures.

☞ *The controls are active if the engine is not stopped. Inadvertent control movement with the engine running during an emergency exit can increase the risk of injury. Stop the engine before exiting through an emergency exit.*

☞ *Enter and exit the cab through the side and front windows in an emergency only!*

Opening the front window completely:

☞ – *see Front window (with cab option) on page 3-28*

3.16 Front window (with cab option)

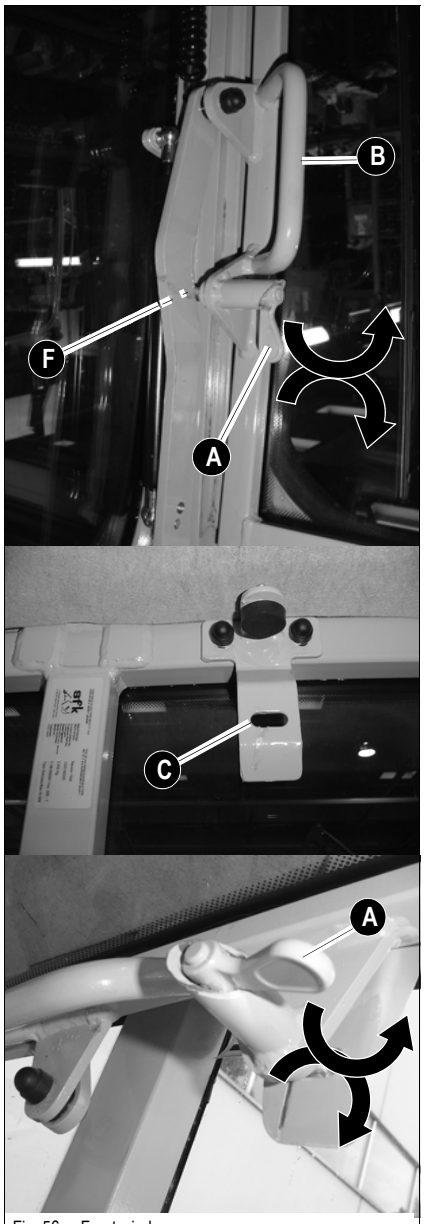

Fig. 56: Front window

Caution!

Crush hazard. Sliding window can pinch or crush extremities.
☞ *Keep extremities and clothing free of the window run.*

Always pull the front window upwards with both handles *B.*

Always let levers *A* lock into place on either side in locks F.

Important!

Fold up the control lever base before opening or closing the front window, in order to avoid any unintentional operation or movement of the machine!

Open the front window as follows:

- Either side of the front window is fitted with a lever.

☞ *Press levers A down on either side.*

☞ *Pull the front window upwards with handles B.*

➥ The front window must lock into rails **C** on either side.

☞ *Lock with levers A on either side in C.*

☞ Press levers A to the rear to do this.

☞ Check whether both levers A are actually locked in rails C.

Fold down the front window as follows:

☞ *Press levers A forwards on either side.*

☞ *Pull the front window downwards with handles B.*

☞ *Lock the front window again by means of levers* **A in lock F.**

☞ Press levers A upwards to do this.

☞ Check whether both levers A are actually locked in rails F.

3.17 Door (with cab option)

Important!

Possibility of equipment damage or injury to others. An open door on a moving machine may slam against the machine, damaging the door frame or window glass. The door may also strike nearby objects or people.

☞ *Always make sure that doors and windows are securely closed before moving the machine.*

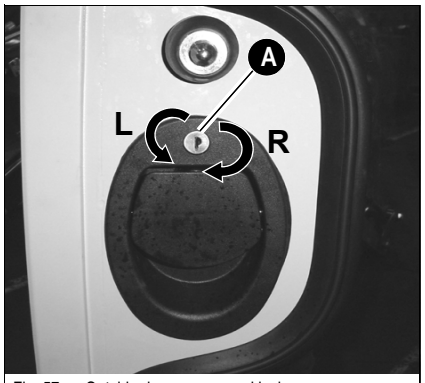

Fig. 57: Outside door opener and lock

Opening the door from the outside:

☞ *Press door lock A.*

Locking the door:

☞ *Turn the key in door lock A counter-clockwise (L).*

☞ The door is locked.

Unlocking the door:

☞ *Turn the key in door lock A clockwise (R).*

☞ The door is unlocked.

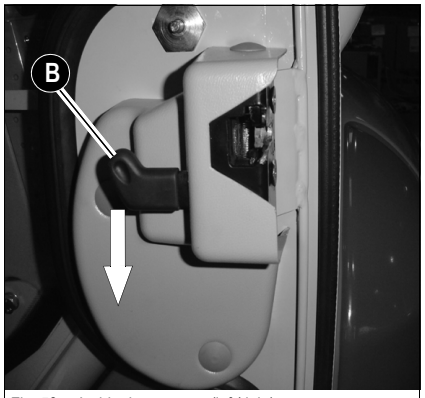

Fig. 58: Inside door opener (left/right)

Opening the door from the inside:

☞ *Push the latch lever B down to unlatch the door.*

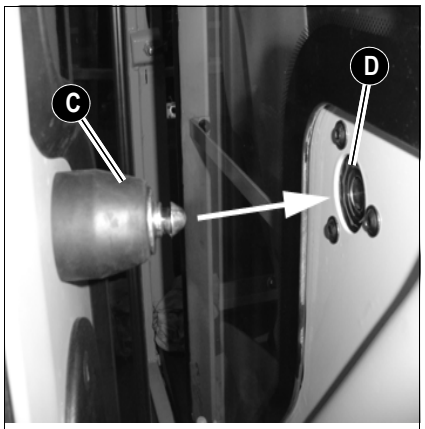

Fig. 59: Door latch

Securing an open door:

☞ *Press the door against bracket C of latch D with an audible click*

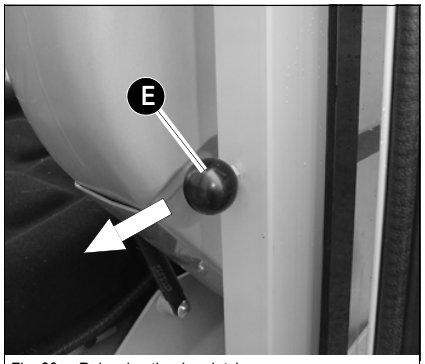

Fig. 60: Releasing the door latch

Releasing the door opener:

Pull button E to release the door from the latch.

3.18 Engine cover

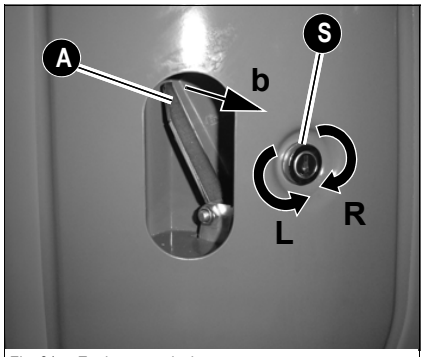

Fig. 61: Engine cover lock

Opening:

☞ *Pull lever A towards b*

Closing:

☞ *Firmly press the engine cover towards the machine until lock S engages with an audible click.*

Locking and unlocking:

Close the engine cover with the starter key of the preheating start switch.

☞ *Turn the starter key in lock S counter-clockwise (L).*

➥ Engine cover locked.

☞ *Turn the starter key in lock S clockwise (R).*

➥ Engine cover unlocked.

3.19 Battery master switch

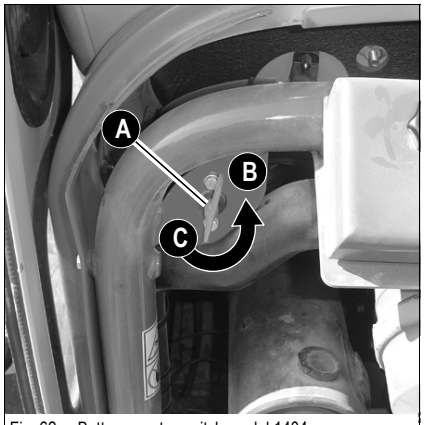

Fig. 62: Battery master switch model 1404

Important!

Do not disconnect the battery while the engine is running.

Important!

Power supply is interrupted directly from the battery, by means of a key

- *Before working on the electric system*
- *As an antitheft precaution*

Interrupting power supply

☞ *Turn key A of the battery master switch to position B and remove it*

Switching on power supply

☞ *Insert key A in the battery master switch*

☞ *Turn the key down to the notched position C*

3.20 Exit through the door (with standard cab option)

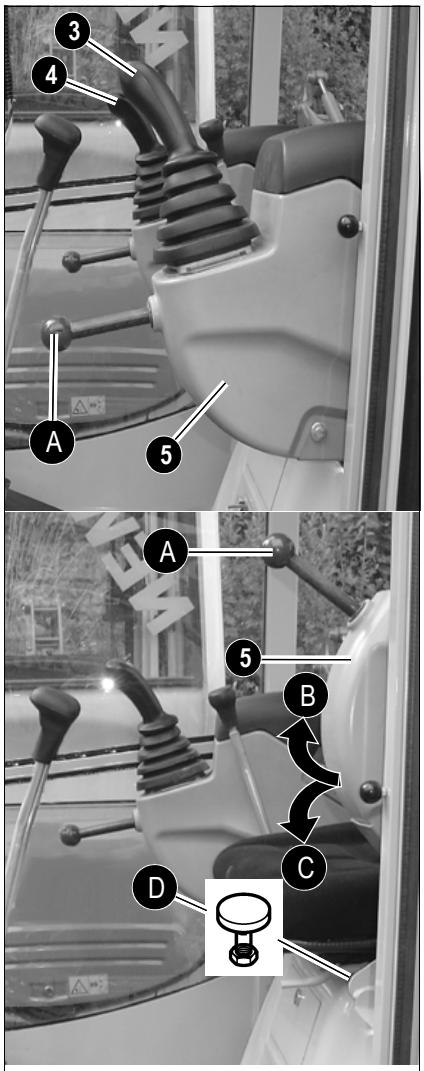

Fig. 63: Control lever base

Caution!

Personal injury hazard. Before entering or leaving the operator station confirm that the stepping surfaces are clean and firm to avoid slipping or tripping.

☞ *Take the following steps before leaving the cab:*

- Stop the machine and follow the parking procedures provided in "Parking the machine" *3-21*.
- Move all controls to neutral.

☞ *Raise control lever base* **5** *with handle A to position B*

➥ The gas strut keeps the control lever base in the top position

Important!

The control lever and console are not designed as a hand hold for exiting the cab.

☞ *Do not use the control handle in the console for assistance entering or leaving the cab.*

☞ *Use the hand hold brackets positioned at the front and rear of the cab door opening for support.*

☞ *Fold control lever base* **5** *down to position C once you are in the cab*

➥ The gas strut keeps the control lever base in the lower position

Important!

The height of the control lever base can be set with stop bolt D

Important!

Enter and leave the cab only through the door as a rule. You can enter and exit the cab through the front and the right-hand side window in an emergency.

3.21 Towing the track excavator

Warning!

Personal injury hazard. Use extreme caution during towing operations.

☞ *Keep people away from the danger zone around the towed and towing machine.*

Important!

Follow the following instructions under all circumstances:

- **Towing a disabled machine can damage the propulsion drive system. Do not tow a disabled machine.**
- The manufacturer's warranty shall not apply to accidents or damage caused by towing the excavator.
- No towing away other machines with towing bracket **A**.

NOTICE

Towing the machine is not recommended. Damage to the machine may occur. If the machine must be towed, follow the guidelines and procedures below.

The towing bracket **A** has a maximum admissible load of 2330 daN (5238 ft.lbs. / 2375 kgf.)

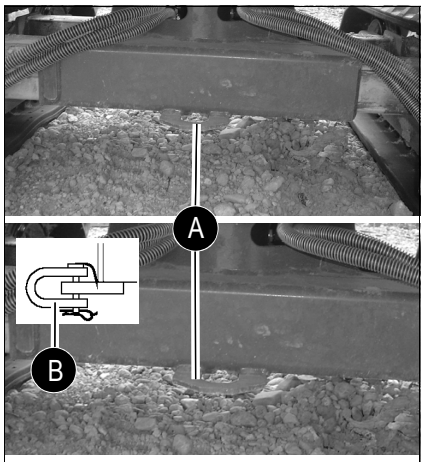

Fig. 64: Towing bracket

☞ *Make sure the excavator can be towed safely.*

☞ *Use towing bracket **A** for towing the machine.*

☞ *Do not use towing bracket **A** to tow another machine, other equipment, or trailers.*

☞ *Secure clevis **B** with the clevis pin and a lock pin.*

☞ *Mount a towing bar or cable of adequate size to the towing bracket.*

☞ *Make sure no one is close to the towing equipment (towing bar, cable).*

☞ *Do not jerk the machine.*

☞ *When towing the machine, do not exceed the maximum operating speed of the excavator.– see chapter Drive speed on page 6-2*

3.22 Lifting excavator

Lifting instructions

- The crane and the lifting gear must have suitable dimensions.
- Lifting the machine requires suitable lifting gear.
- Secure the machine against unintentional movement!.

Warning!

Crushing hazard.

☞ *Do not lift the machine with someone in the operator seat/station or on the machine*

☞ *Persons responsible for attaching the lifting devices to the machine shall be experienced with crane operations and hand signals.The crane operator shall maintain sight of the personnel attaching, guiding, and unhooking the excavator.*

☞ *Use OSHA rated and approved lifting devices capable lifting the excavator, attachments, options and accumulated debris. Refer to the general weight guidelines in the specification section of this manual.*

☞ *Do not lift the machine with material in the bucket attachment.*

☞ *The crane operator shall observe the lift zone and lift the machine when the area is clear of people.*

☞ *Do not attempt to lift the excavator with any type of crane including wheel loaders unless the crane operator is qualified to lift loads in craning operations. The crane operator shall be knowledgable of OSHA 1910 craning regulations.*

☞ *The lifting devices must be the specified lengths shown as L1 and L2 in Figure 58 and the table .*

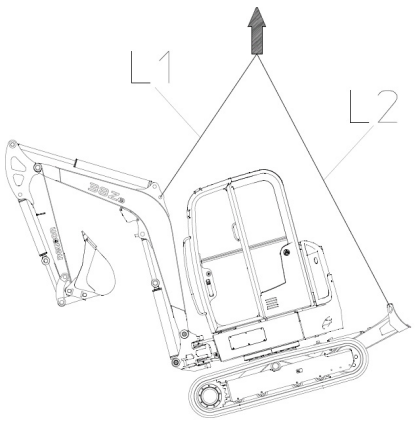

Fig. 65: Crane handling

☞ *Load the machine as follows:*

- Fit the standard bucket and lock it safely.
- Empty the standard bucket.
- Tilt in the standard bucket and lower it to transport position.
- Stop the engine.
- Fold the control lever base up.
- Remove the starter key.
- Do not allow anyone to stay in the cab, and close the doors and the engine cover.
- Use suitable lifting gear, tracks etc.

☞ Mount the lifting gear at the point on the boom provided for lifting the machine.

☞ Mount the lifting gear at the points on the stabilizer blade provided for lifting the machine.

☞ Make sure the lifting gear has the required lengths L1 and L2.

- Slowly raise the machine.

Required lengths L1 and L2 of the lifting gear:

Excavator	Length	Dimension
1404³	L1	1910 mm (6'3'')
1404³	L2	3150 mm (10'4'')

Authorized loads	Force
Boom lift eye	40 kN (8992 lbf)
Stabilizer blade lift eye	40 kN (8992 lbf)

3.23 Loading and transporting the machine

Loading and transporting instructions

- The transport vehicle must be of adequate size – refer to *Chapter 6 "Specifications"* for the machine's dimensions and weights!
- Remove any mud, snow or ice from the tracks so that the machine can be safely driven onto the ramps
- Secure the machine against unintentional movement – *see Parking the machine* on page 3-21!

Warning!

Personal injury hazard.

☞ *Load the excavator from a level surface to reduce potential risks from slipping and tipping.*

☞ *Do not use damaged loading ramps or attempt to transport the excavator on a damaged carrying surface.*

☞ *Do not transport the excavator with defective equipment. If using a trailer towed by a vehicle, confirm that the combination is compatible for towing the excavator and has adequate tie down provisions to secure the tie down straps/tracks.*

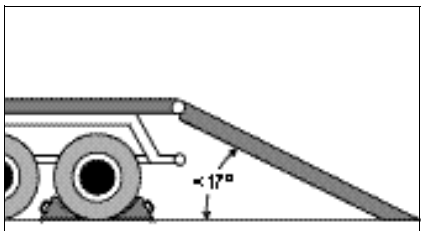

Fig. 66: Access ramps

☞ *Load as follows:*

- Secure the transport vehicle with chocks to prevent it from rolling.
- Place the access ramps at the smallest possible angle. Make sure the grade does not exceed 17° (30%). Use access ramps with an antiskid surface only.
- Make sure the loading area is clear and access to it is not obstructed – e.g. by superstructures.
- Make sure the ramps and the tracks of the excavator are free of oil, grease and ice.
- Start the engine of the excavator.
- Raise the bucket sufficiently so that it will not touch the ramps.
- Carefully drive the excavator onto the middle of the transport vehicle.
- Lower the bucket to the loading area.
- Stop the engine.
- Fold the control lever base up.
- Remove the starter key.
- Do not allow anyone to stay in the cab, close the doors and the engine cover.

Important!

The manufacturer's warranty does not apply to accidents or damage caused by loading or transporting the excavator.

3.24 Tying down the excavator

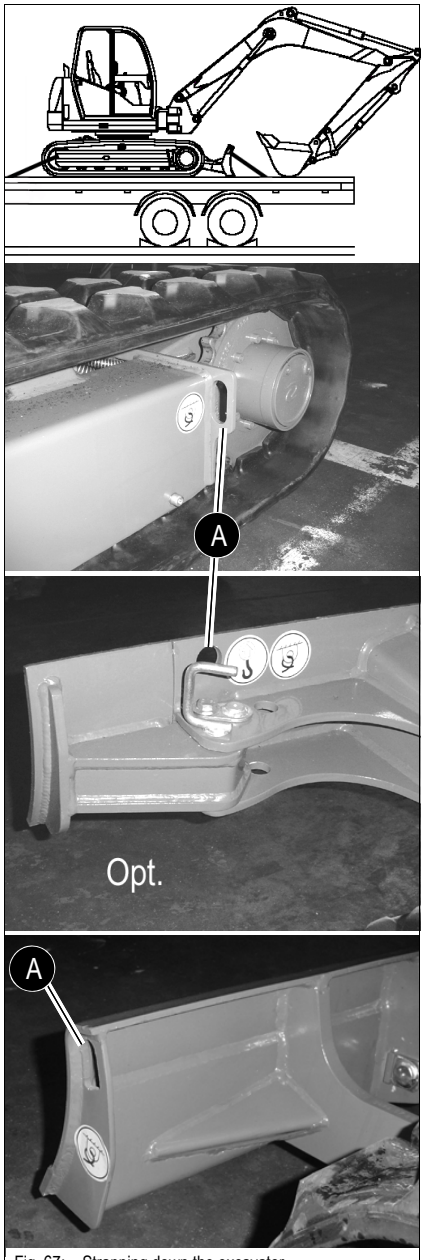

Fig. 67: Strapping down the excavator

Warning!

Personal injury hazard.

☞ *Confirm that the loaded height does not exceed the clearance limits and legal regulations for transport on public roads.*

☞ *The excavator shall be firmly attached to the transport using the provided tie down locations (Reference Figure 6).*

☞ *Tie down shall be accomplished using OSHA approved devices to prevent machine movement during transport.*

- Make sure the authorized maximum height is not exceeded.
- Secure the tracks of the excavator at the front, rear and at the sides.
- Lower the stabilizer blade and the boom.
- Firmly strap down the excavator at the eye hooks **A** onto the platform, with belts or chains of adequate size.
- Before transporting the machine through heavy rain, close the outlet of the muffler with a simple cap or suitable adhesive tape.
- Make sure the driver of the transport vehicle knows the overall height, width and weight of his vehicle (including excavator) before departure, as well as the legal transport regulations of the country or countries where transport is to take place!

3.25 Operating the machine

General safety instructions

Avoiding cave-in or collapse:

- Do not operate at the edge of an open excavation.
- Do not undermine wall foundations.
- When working on roofs or similar structures, check the resistance and the structure itself before starting work. The building can collapse, causing severe injury and damage.

Preventing tip-overs:

- Do not excavate deeply under the front side of the machine. The ground under the machine could collapse and cause to tip the machine.
- Do not perform demolition work below the machine. Doing so can cause the machine to tip over.
- In general the machine is more likely to tilt if the attachment is positioned laterally than if it is positioned at the front or rear of the machine.
- The machine can become unstable and tip, if a demolution hammer or other heavy attachment is used. When operating the machine on level ground or on slopes:
  - ☞ *Do not move the attachmet rapidly in any direction.*
  - ☞ *Avoid use on slopes.*

Avoiding falling debris:

- Do not create an overhang above the excavator.
- Do not create an overhang of debris during demolution.
- Install a front guard when working in areas with a risk of objects falling from the front (e.g. demolition work).

Increasing operator safety:

- In order to leave the cab more easily under especially difficult circumstances, position the tracks perpendicularly to the roadside or to the uphill slope with the drive pinion behind the driver.
- Prior to working on the structure surface, confirm that the floor or roof of a building is strong enough to support the excavator and any loads lifted my the excavtor.
- Do not raise the bucket over the heads of other workers or over the driver seats of trucks or of other means of transport. The material can tilt, or the bucket can knock against the truck and cause severe injury or damage.
- Operation of the machine by unauthorized staff is prohibited!
- The hydraulic system of the machine is still pressurized even when the engine is not running! Release the pressure in the sections of the system and hydraulic lines which are to be opened before starting setup or repair work, e.g. fitting/removing an attachment with hydraulic functions.
  – *see Lowering the boom at engine standstill / energy failure* on page 3-39.
- Look out for high-voltage cables, underground cables, gas and water pipes during excavation work.

Preventing equipment damage:

- Do not use the impact force of the attachment to perform demolition work. Debris can cause personal injury or damage to property or the equipment.

3.26 Control levers/Control pattern „A“: overview

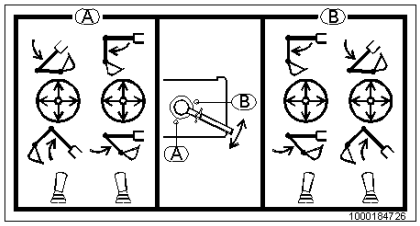

Important!

Fast actuation of the control lever for the attachment moves the attachment fast. Slow actuation of the control lever moves the attachment slowly.

Left-hand side control lever

Warning!

Potential loss of machine control. The attachment will move in response to movement of the left hand control lever, potentially creating a hazardous condition affecting machine control.

☞ *Do not actuate the left hand control lever while the machine is traveling at maximum speeds on the work site.*

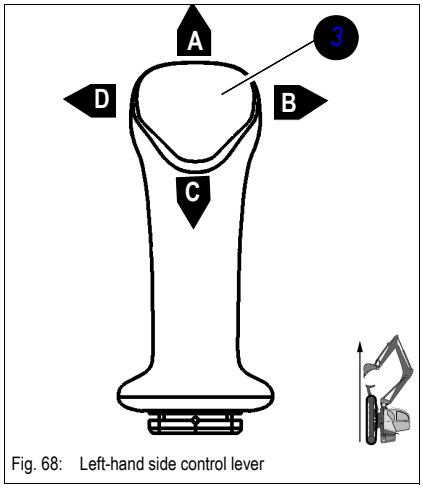

Fig. 68: Left-hand side control lever

Position	Lever	Function
• **A**	☞ *Forwards*	➥ Stick is extended
• **B**	☞ *To the right*	➥ Upper carriage rotates to the right
• **C**	☞ *Backwards*	➥ Stick is retracted
• **D**	☞ *To the left*	➥ Upper carriage rotates to the left

Important!

Always perform smooth control movements.

Boom swivel controls

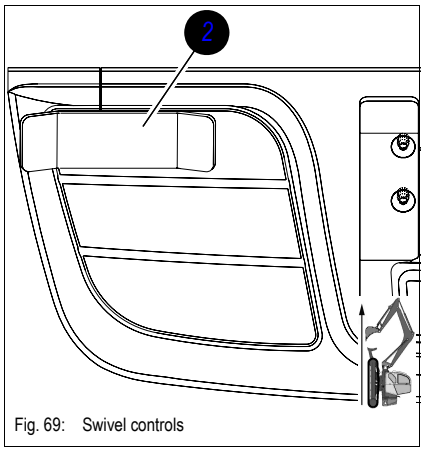

Fig. 69: Swivel controls

Swivel boom to the left:

☞ Move the right-hand side pedal 2 to the left.

Swivel boom to the right:

☞ Move the right-hand side pedal 2 to the right.

Auxiliary hydraulics

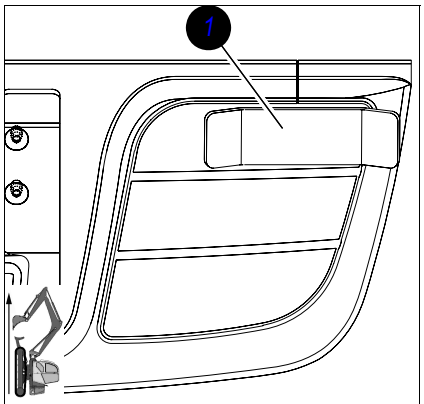

Fig. 70: Auxiliary hydraulics

Actuating the auxiliary hydraulics:

Oil flow in 1st direction:

☞ *Move the left-hand side pedal 1 to the left.*

Oil flow in 2nd direction:

☞ *Move the left-hand side pedal 1 to the right.*

Right-hand side control lever

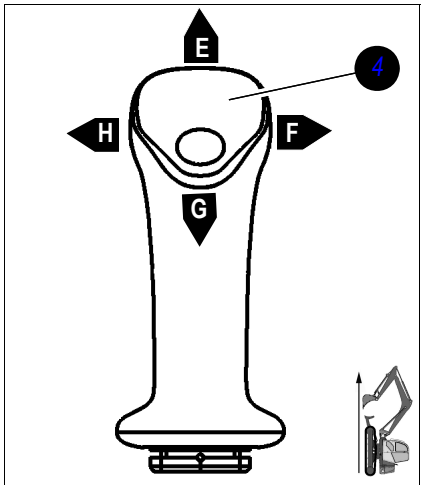

Fig. 71: Right-hand side control lever

Position	Lever	Function
• **E**	☞ *Forwards*	➥ Boom is lowered
• **F**	☞ *To the right*	➥ Dumps bucket
• **G**	☞ *Backwards*	➥ Boom is raised
• **H**	☞ *To the left*	➥ Fills bucket

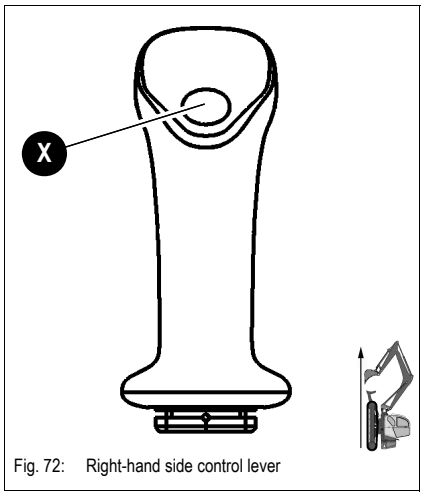

Fig. 72: Right-hand side control lever

Button	Function
☞ *X*	➥ Horn

Lowering the boom at engine standstill / energy failure

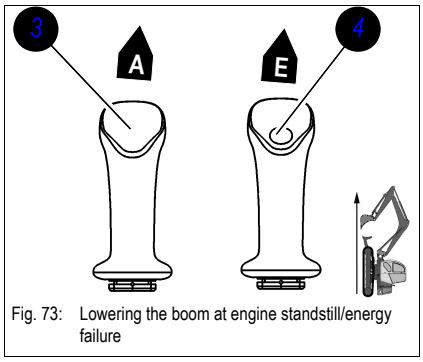

Fig. 73: Lowering the boom at engine standstill/energy failure

Warning!

Potential loss of machine control. The boom will lower with the engine stopped if the boom control valve lever is inadvertently moved forward.

☞ *If the engine stops and cannot be restarted with the attachment suspended above the working surface, slowly move the boom control forward and lower the attachment to the surface until the attachment rests on the surface before leaving the operator seat.*

☞ *Do not lower the boom unless seated in the operator seat and certain that nobody is at risk from lowering the boom.*

☞ *Make sure that no one is dangerously close to the machine.*

☞ *Follow the boom lowering procedure below.*

☞ *Press forwards and hold the control lever (**A and E**)*

➥ Until the arm system is completely lowered.

☞ *Return the control lever to neutral.*

Rotating the upper carriage

Specific safety instructions

- Until the hydraulic fluid reaches operating temperature, the upper carriage can creep slightly after the control is placed in the neutral position.
- Fast actuation of the control lever rotates the upper carriage fast, slow actuation of the control lever rotates the upper carriage slowly.
- If the upper carriage needs to be rotated on a slope, let the engine run at idling speed and actuate the control lever very slowly. Proceed with extreme care and avoid abrupt movements if the bucket is full.

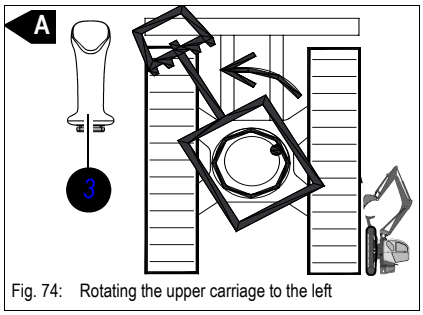

Fig. 74: Rotating the upper carriage to the left

Rotate the upper carriage to the left as follows:

☞ *Push the left-hand side control lever 3 to the left **A.***

➥ The upper carriage rotates to the left.

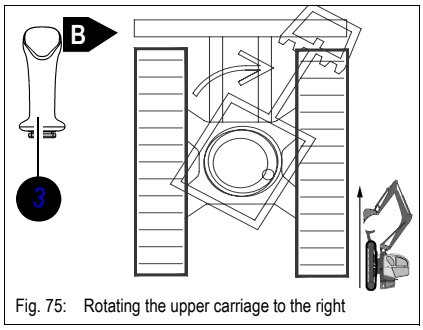

Fig. 75: Rotating the upper carriage to the right

Rotate the upper carriage to the right as follows:

☞ *Push the left-hand side control lever 3 to the right **B.***

➥ The upper carriage rotates to the right.

Upper carriage hydraulic brake

Upper carriage hydraulic brake:

The upper carriage's rotation is sufficiently braked by moving control lever 3 back to the neutral position. Moving the control lever in the opposite direction (counteraction) brakes the upper carriage with maximum hydraulic output.

3.27 Changeover valve for control Pattern „B“(option)

Important!

Possible loss of machine control. Changing the control valve mode selection position will reverse the function control of the hand levers. The left hand lever controls the boom, not the stick. The right hand lever controls the stick.

☞ *Confirm the selected mode before starting the engine to avoid unintentional movement of the stick or boom.*

☞ *Always secure wing nut **J** on the directional valve's changeover lever.*

– *see Type label* on page 1-7

Left-hand side control lever

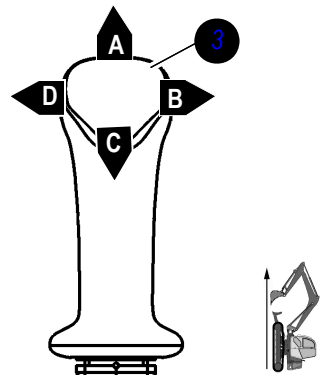

Fig. 76: Left-hand side control lever (SAE controls)

Position	Lever	Function
• A	☞ *Forwards*	➥ Boom is lowered
• B	☞ *To the right*	➥ Upper carriage rotates to the right
• C	☞ *Backwards*	➥ Boom is raised
• D	☞ *To the left*	➥ Upper carriage rotates to the left

Right-hand side control lever

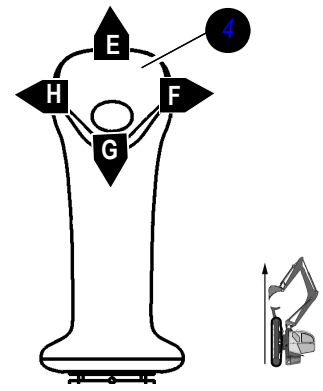

Fig. 77: Right-hand side control lever (SAE controls)

Position	Lever	Function
• **E**	☞ *Forwards*	➥ Stick is extended
• **F**	☞ *To the right*	➥ Dumps bucket
• **G**	☞ *Backwards*	➥ Stick is retracted
• **H**	☞ *To the left*	➥ Fills bucket

Directional valve position

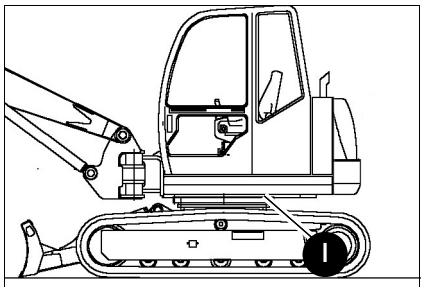

Fig. 78: Directional valve position

The directional valve is located on the left in base plate **I** of the chassis.

Directional valve

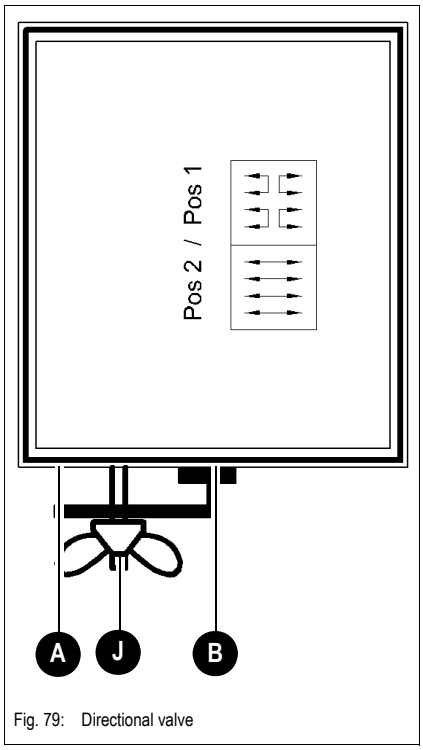

Fig. 79: Directional valve

The changeover valve switches from ISO to SAE controls and vice versa.

Position	Function
• A	➥ ISO controls
• B	➥ SAE controls

☞ *Tighten wing nut **J** after changing control mode.*

Warning!

Possible equipment damage or injury hazard. Never operate the machine if wing nut **J** is defective or missing!

☞ *Immediately contact your Wacker Neuson dealer to replace a defective or missing wing nut.*

3.28 Coupling and uncoupling attachments

Coupling and uncoupling the attachments is described below for a bucket. If you are fitting or removing attachments with their own hydraulic functions – e.g. grab or offset bucket – you must follow the special information given in the attachment's Operator's Manual. Also refer to the attachment's Operator's Manual for the procedure to follow for fitting an attachment onto a quickhitch.

Warning!

Personal injury hazard. Using improper tools or installation techniques while coupling attachments can cause injury.

☞ *Couple attachments only when the engine is stopped.*

☞ *Do not attempt to couple / uncouple attachments on sloping or uneven surfaces. The excavator and the attachment to be coupled / uncoupled shall be on firm surfaces to avoid sudden unintentional movement.*

☞ *Align the attachment holes in the bucket with a drift to facilitate sliding the pin into the respective holes provided for the connection between attachment and stick.*

☞ *Do not attempt to correct misalignment by using the connecting pin and a hammer. Striking the pin with a hammer can result in a steel chip or splinter being released.*

☞ *Always wear protective goggles, helmets, gloves, and other safety equipment when installing the attachment connecting pins.*

☞ *Do not remove the connecting pins from the bucket attachment unless the bucket has been stabilized to prevent motion when the connecting pins are removed. Do not stand on the closed (back) side of the bucket attachment when disconnecting the bucket.*

☞ *Do not attempt to disconnect the bucket attachment until it rests firmly on the ground or a stable surface. Removing the connecting pins of the bucket attachment with the attachment raised is an unsafe practice that will create a hazardous condition from the falling bucket.*

☞ *Do not align the connecting holes with fingers. Do not place fingers and hands over the connecting brackets to align the connecting hole to avoid potential shearing, pinching or crushing injuries.*

☞ *After the attachment is connected to the excavator stick and before resuming operation, make sure the attachment is safely locked with the stick and the tilt rod, or with the quick hitch option.*

Removing a bucket

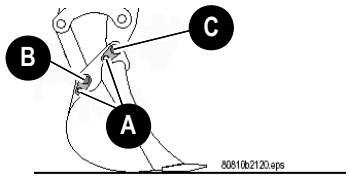

Fig. 80: Removing a bucket

☞ *Proceed as follows:*

- Lower the bucket to the ground with its flat side facing down.
- **Stop the engine.**
- Remove linch pin **A.**
- First remove pin **B**, and then pin **C**. Carefully expel pins that are stuck with a hammer and a brass punch.

If pin **C** is stuck:

- Start the engine.
- Slighty raise and lower the boom to take the load off the pin.
- Stop the engine.

Important!

Place the bucket only with minimum pressure on the ground as you remove the pins. The higher the pressure on the ground, the higher the resistance and the more difficult it is to remove the pins.

Mounting a bucket

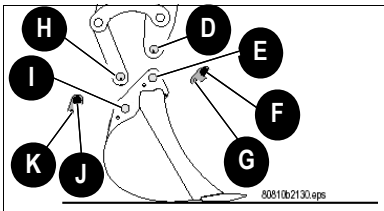

Fig. 81: Mounting a bucket

☞ *Proceed as follows:*

- Lower the bucket to the ground with its flat side facing down.
- Grease the joints and the pins before inserting them.
- Start the engine.
- Straighten the stick so that bores **D** and **E** are flush.
- Insert greased pin **F**.
- Tighten lock screw **G**.
- Actuate the stick ram until bores **H** and **I** are flush.
- Insert the greased pin **J**.
- Lock linch pin **K**.

Quickhitch facility (option)

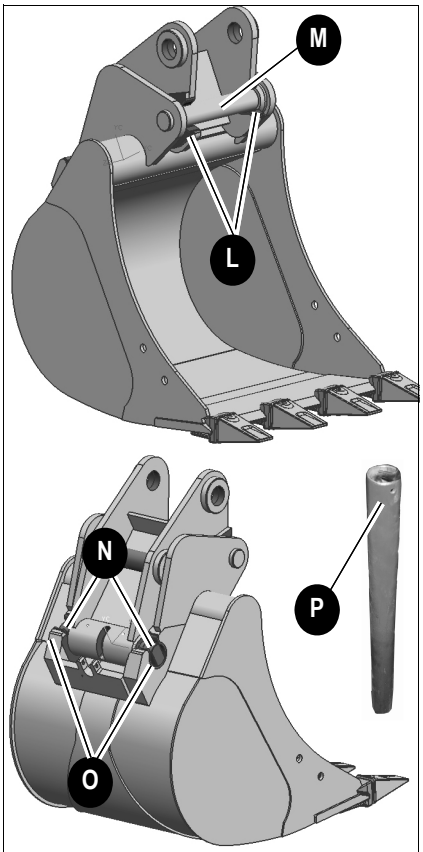

Fig. 82: Bucket with quickhitch facility

Warning!

Crushing hazard. Possibility of crushing / striking injury from attachments. An unlocked quick hitch attachment can move unexpectedly and strike nearby people or objects.

☞ *Before using the excavator, make sure the attachment is securely locked onto the quick hitch.*

☞ *The lock must be visible on either side of the mounting bore of the attachment to confirm the hitch is locked.*

☞ *Re-equip as follows:*

- Approach the machine to the attachment.
- Hitch coupling bar **M** onto coupling claws **L** of the quickhitch to pick up the bucket.
- Engage lock mechanism **N** in mounting bores **O**.
- Place the bucket on level ground.

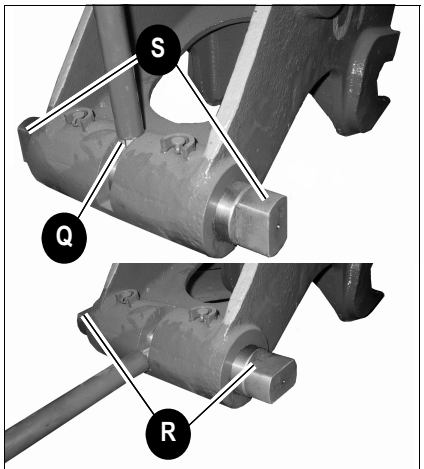

Fig. 83: Bucket with quickhitch facility

☞ *Lock as follows:*

- Stop the engine.
- Insert tube **P** (included in scope of delivery) in clamping sleeve **Q**.
- Press the tube downwards.
- The lock pins must be in position **R**.

☞ *Unlock as follows:*

- Stop the engine.
- Insert tube **P** (included in scope of delivery) in clamping sleeve **Q**.
- Press the tube upwards.
- The lock pins must be in position **S**.

Connections for auxiliary hydraulics

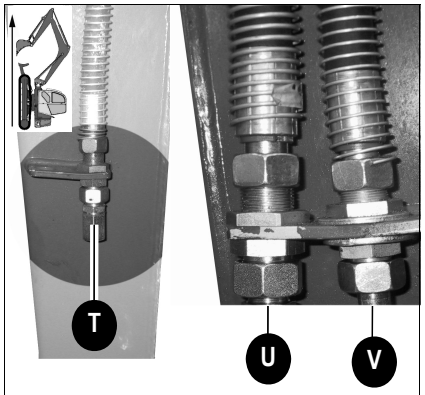

Fig. 84: Connections for auxiliary hydraulics

Port	Stick (left)	Stick (right)
T	☞ *Pressure line*	
U		☞ *Large return line*
V		☞ *Pressure line*

Important!

Follow the instructions in the attachment manufacturer's Operator's Manual for connecting the auxiliary hydraulics to attachments.

Hydraulic couplings

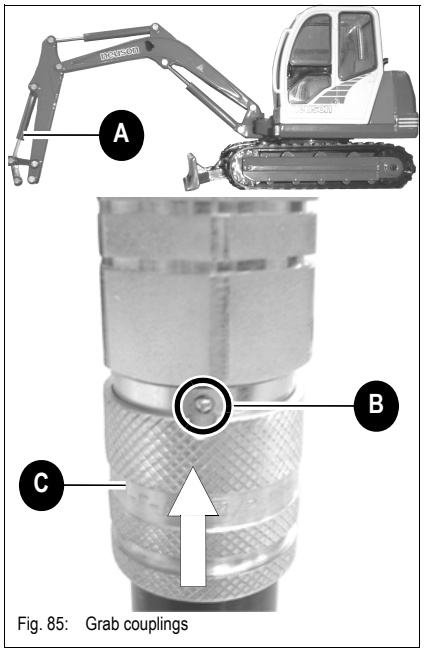

Fig. 85: Grab couplings

Connect and disconnect the hydraulic couplings as follows:

Removing the coupling:

☞ *Park the machine on firm and level ground.*

☞ *Extend stick ram **A** halfway through its travel.*

☞ *Stop the engine.*

☞ *Turn the starter key to position „1".*

☞ *Release the pressure on stick ram A by moving the right-hand side control lever to the left and right.*

☞ *Fold the control lever base up.*

☞ *Turn lock sleeve **C** towards lock ball **B**.*

☞ *Pull lock sleeve **C** upwards.*

☞ The coupling opens.

Connecting the coupling:

☞ *Clean the male and female ends of the coupling.*

☞ Align the male and female ends of the coupling and push them together until movement stops.

☞ Pull the coupling sleeve away from the ball (Fig. 85) until it stops moving.

☞ *Rotate the sleeve (Fig. 85) to misalign the slot in the sleeve with the ball in the opposite half of the coupling. This will prevent unintended sleeve movement that may cause the coupling to disconnect unintentionally.*

Attachments

Important!

Refer to the attachment manufacturer's operation and maintenance manual for using and performing maintenance on attachments such as hammers, grabs etc.

Working with the standard bucket

The following section describes work operations with the machine equipped with the standard bucket.

The standard bucket is mainly used for digging earth, and for loosening, picking up, digging and loading loose or solid material.

Prohibited operation

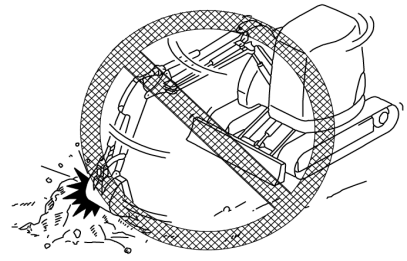

Fig. 86: Working with the swivel force

Working with the swivel force

☞ *Do not use the swivel force of the upper carriage to compact the ground or tear down piles or walls.*

☞ *Do not allow the bucket teeth to penetrate into the ground as you rotate the upper carriage.*

➥ Working this way damages the attachments.

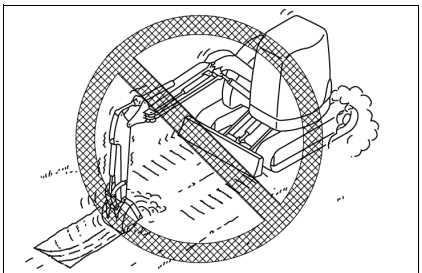

Fig. 87: Working with the drive force

Working with the drive force

☞ *Do not allow the bucket to penetrate into the ground and do not excavate by using the drive force of the machine.*

➥ Working this way may damage the machine or the attachments.

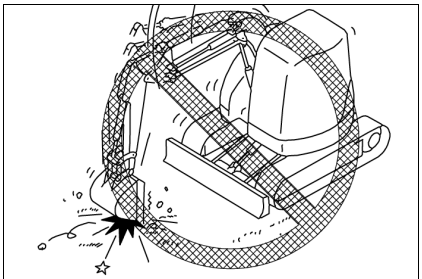

Fig. 88: Avoid impact during operation

Avoid impact during operation to avoid damage to the excavator bucket and machine components.

☞ *Do not suddenly drop the bucket to increase penetration, break material, or compact material.*

➥ Working this way may greatly reduce the machine's service life.

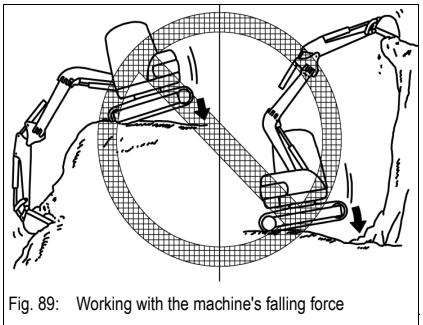

Fig. 89: Working with the machine's falling force

Avoid tipping the machine and then releasing the boom hydraulics to break up material or compact the work surface.

☞ *This is not only hazardous operation; it is abusive operation.*

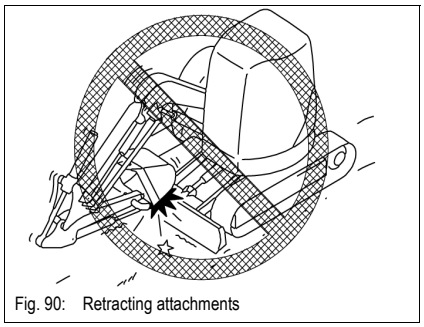

Fig. 90: Retracting attachments

Retracting attachments

☞ *Make sure the bucket does not hit the stabilizer blade as you retract attachments for driving or transport..*

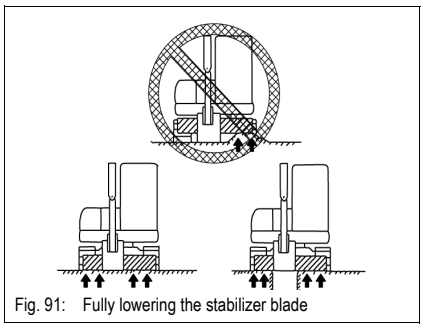

Fig. 91: Fully lowering the stabilizer blade

Working with the stabilizer blade

☞ *Do not ram objects with the stabilizer blade.*

☞ *Do not pry objects with the stabilizer blade.*

☞ *Do not support the excavator on one corner of the stabilizer blade.*

Excavator work position

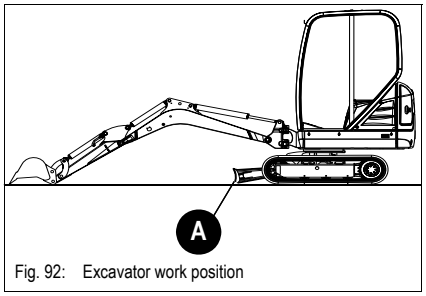

Fig. 92: Excavator work position

Proceed as follows:

☞ *Place stabilizer blade A on the side you want to dig.*

Bucket position when digging

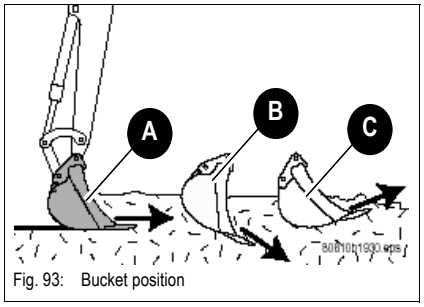

Fig. 93: Bucket position

☞ *Move the bucket as shown in **A***

➥ Move the flat side of the bucket parallel to the ground.

Important!

Position **B** causes the bucket to penetrate into the ground. Work slows down, and the engine and the hydraulic pump are subject to overload if this position is used over a longer period of time!
Position **C** causes the bucket to be forced upwards and not to be filled completely. This slows down work, too.

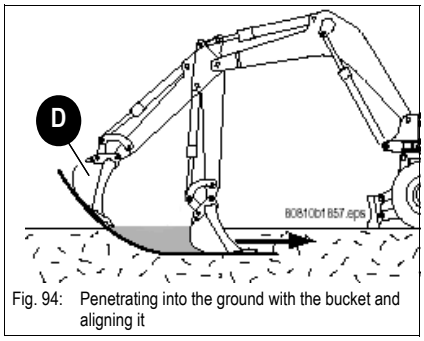

Fig. 94: Penetrating into the ground with the bucket and aligning it

☞ *Dig as follows:*

- Penetrate into the ground with the bucket **D.**
- Lower the stick and at the same time align bucket until.
- Reaching the required digging depth and.
- The flat side of the bucket is parallel to the ground (see bucket position).

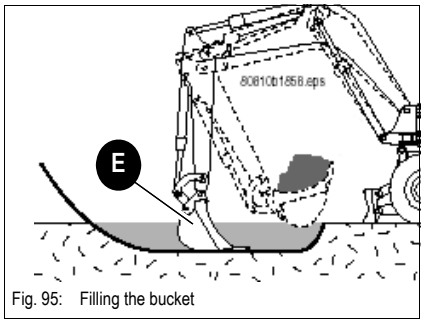

Fig. 95: Filling the bucket

☞ *Pull bucket* **E** *parallel to the ground towards the excavator. At the same time, if possible:*

- Move the stick towards the excavator.
- Lower the boom.

☞ *With a sufficiently full bucket* **E***:*

- Keep on moving the stick towards the excavator and at the same time.
- Curl the bucket to complete the filling operation as the stick is moved toward the machine.

Excavating trenches

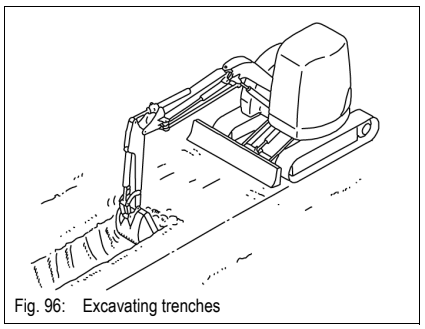
Fig. 96: Excavating trenches

- Excavating trenches is more efficient

☞ By using a suitable bucket for this work and positioning the track tracks parallel to the side of the trench.

☞ In the case of large trenches, first excavate the side sections and then the center section.

Loading

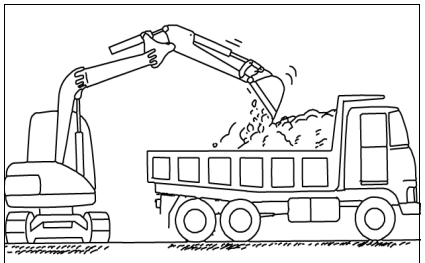
Fig. 97: Loading

- Loading in confined areas with a limited angle of rotation is more efficient

☞ by positioning the truck so as to ensure maximum visibility for the driver of the excavator.

- Loading material on trucks is easier and faster.

☞ If the hydraulic excavator is placed at the rear end of the truck and not at the sides.

Grading

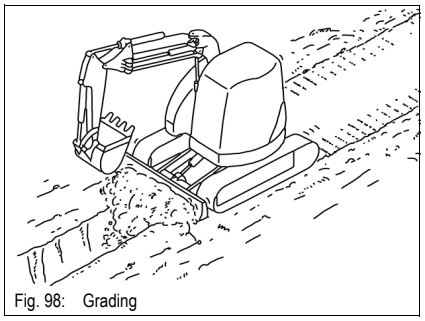
Fig. 98: Grading

- Use the stabilizer blade to fill in trenches and to grade the surface.

Important!

Work on level ground. Grade with the stabilizer blade first in the case of sloping ground.

Excavating trenches sideways

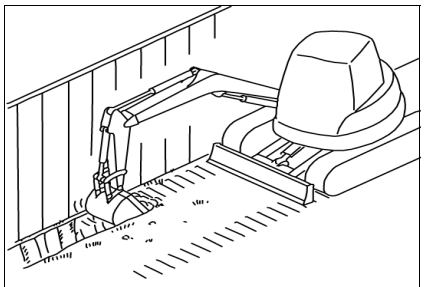

Fig. 99: Excavating trenches sideways

- The machine can be used for excavating trenches sideways in confined areas

  ☞ By rotating the upper carriage and swivelling the main boom (combined position and movement of both).

Recommendations for digging

When planning and performing digging work, we recommend that you observe the following points:

- Exits from pits must be outside the excavation face and as level as possible.
- Dig by removing adjacent strips if possible.
- Always travel out of an excavation up the grade, with the bucket on the up slope side of the machine.
- When entering an excavation down a slope with a loaded bucket, always travel with the bucket on the up slope side.

Loading vehicles

When loading vehicles, we recommend service the following into account:

- If possible, the truck and the working direction of the bucket should form an angle of 45°.
- Only raise the full bucket to dump height when you are standing in a straight line with regard to a truck, for instance.
- If possible dump with the wind behind you to keep the dust away from your eyes, air filters and fans!

Freeing the machine

If your machine gets stuck in the ground:

☞ *Dump the contents of the bucket.*

☞ *Extend the boom, stick, and bucket to the maximum reach and lower the bucket to the ground surface.*

☞ *Slowly uncurl the bucket to push the machine away from the bucket. While doing this, operate the track propulsion system slowly to assist the action of the bucket.*

➥ Under alternate circumstances, the bucket can be curled to free the machine in the direction of the curling action.

☞ *Once the machine has reached a firm surface, maneuver away from the unstable surface conditions.*

3.29 Grading

Warning!

Possibility of crushing/striking injury from a moving stabilizer blade.

☞ *Make sure no one is in the area of danger when working with the stabilizer blade.*

Grading

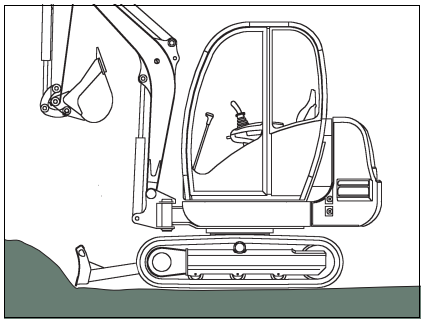

☞ *Lower the stabilizer blade to the ground – see chapter 3.8 Stabilizer blade control / telescopic undercarriage (option) on page 3-19.*

☞ *Set the depth of the layer you want to remove with the stabilizer blade lever.*

➥ Do not use the stabilizer blade hydraulic cylinders to raise the track idlers off the working surface.

➥ The clearance between the stabilizer blade and the ground should be about 1 cm(0.4").

Working alongside trenches

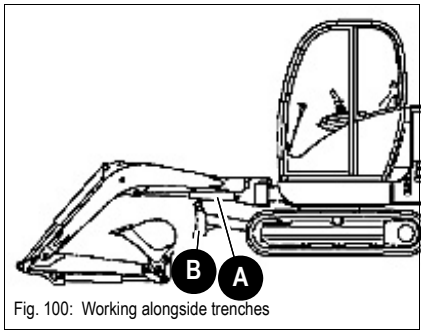

Fig. 100: Working alongside trenches

NOTICE

Possible piston rod damage. Piston rod **A** of the boom ram can be damaged when working alongside trenches, slopes etc. and operating the stabilizer blade and the boom incorrectly.

☞ *Always use stabilizer blade **B** for stabilization during excavation work.*

☞ *Make sure stabilizer blade **B** never touches piston rod **A** (Fig. 100).*

☞ *If you perform deep excavations with stabilizer blade **B** at the front, make sure piston rod **A** does not touch or rest on stabilizer blade **B** (Fig. 101).*

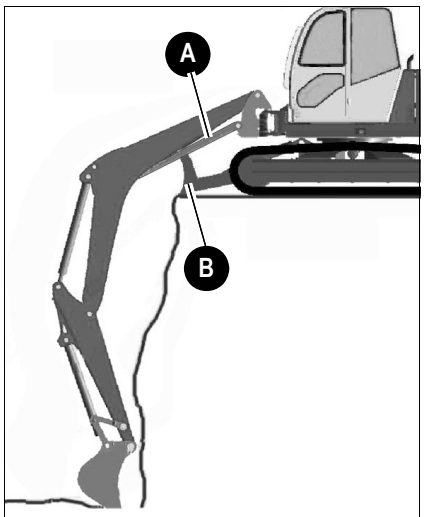

Fig. 101: Deep excavation